Horizontal transfer and height adjustment system for unload and to move containers

MF 2102 Machine Design Project

Lukas Backlund | Truls Nygren Widmark | Rodolfo Palomino Jimenez | Boglárka Bujdosó

Supervisor: Claes Tisell

2025/2026/autumn P2

Abstract

This report develops and evaluates a mechanical concept for horizontal transfer of an ISO container between a train wagon and a truck, including the height adjustment required to insert and support the transfer track. The proposed system uses 2 pairs of overlapping telescopic arms to create a temporary level track, a wheeled platform transports the container along the track, vertical hydraulic cylinders for lifting and levelling on the offloading side, and a mechanically linked four-screw-jack platform that provides the vertical reaction required after arm extension.

The design load case assumes a maximum container mass of 30 480 kg and a 5% centre of gravity offset in both horizontal directions. The methods used include static force and moment equilibrium for load distribution, beam theory for telescopic arm deflection, traction, torque, speed relations and MATLAB-based evaluations over arm-extension as well as FEM analysis.

For the telescopic arms, the calculated extension time is 3,7 s, the maximum required cylinder extracting force is 2,32 kN, and the maximum deflection is 5,09 mm (before being supported). For the platform travel requirement of 4 meters in 10 seconds, the required traction force is 3,25 kN, wheel speed 79,78 rpm, driven shaft torque 129,9 Nm, yielding a total reduction of 17,93 and a supporting selection of a 2,2 kW, 4-pole motor at 1430 rpm with an electromagnetic brake. Height adjustment sizing yields a worst-case vertical cylinder force of 90,45 kN and a required screw jack force of 43,24 kN per jack; with a selected 100 kN translating screw jack, a 305 mm stroke is achieved in approximately 33,9 s at a 360-rpm worm input.

Overall, the results indicate that the concept is mechanically feasible for the specified load case and can provide a preliminary basis for subsequent component detailing and prototyping.

Foreword

This project was conducted in the scope of the course MF2102 Machine Design: Project Course given at KTH during the fall of 2025.

We would like to thank our supervisor Claes Tisell for his guidance during this project.

In Table i, who did what and who was responsible for what. A capitalized X signifies the main responsible for the subject, while a lower case indicates participation.

Table i – Who did and was responsible for what

Name	Lukas	Truls	Rodolfo	Boglárka
Report	x	x	x	X
Visualisations	x			X
FBD Equations	x	X	x	x
MATLAB		X	x	
FEM	x	X		
CAD: Asm	X			
CAD: Par	X	x	x	x
Hydraulics				X
Motor + gearbox	x	x	X	x
Bearings + shaft	X	x		
Screw jack			X	

Table of contents

Abstract i
Foreword ii
Table of contents 1
1. Introduction 2
2. Alternative solutions 4
3. The final solution 5
3.1. Geometric and Force Analyses 6
3.1.1. System level 6
3.1.2. Telescopic arms 7
3.1.3. Vertical lift 15
3.2. FEM Analysis 17
3.2.1. Telescopic arms 17
3.2.2. Platform 20
3.3. Chosen components 24
3.3.1. Telescopic arms 24
3.3.2. Platform 26
3.3.3. Vertical lift 40
4. Discussion 45
4.1 Geometry and force analysis 45
4.2 FEM 45
4.3 Chosen components 46
5. References 48
Appendix 1: MATLAB code extension analysis, including function 1
Appendix 2: MATLAB code for load analysis 1
Appendix 3. MATLAB for platform motion 1
Appendix 4. MATLAB for shaft dimensioning 1
Appendix 5. Convergence study for FEM 1

1. Introduction

The growing global demand for freight transport has driven the search for more efficient, safe, and sustainable solutions. In particular, the transfer of cargo between trains and trucks represents a critical point in the logistics chain, where manoeuvring times, need for large infrastructure and operational risks translate directly into more costs and operational limitations.

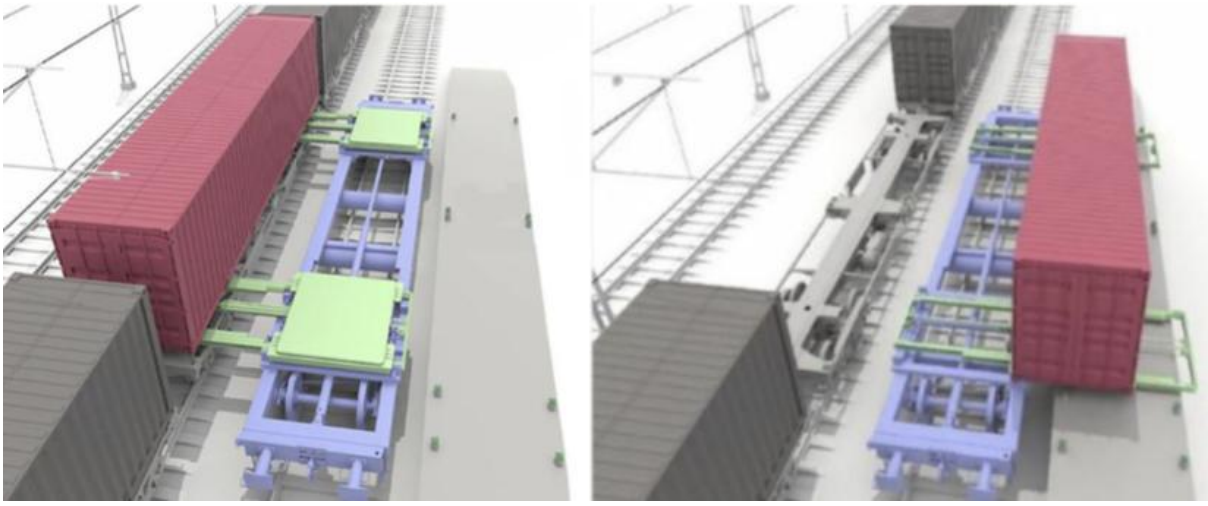

Figure 1 - Horizontal unloading of containers

The project presents as a case study the design of a mechanical system capable of performing the horizontal transfer of cargo, both for loading and unloading, between a railway car and a truck, complemented by a height adjustment system that allows the cargo position to be adapted to perform this horizontal movement effectively.

The overall objective of the project is to develop a design solution that combines load capacity, movement, safety, and technical feasibility, following a structured process from problem definition to the proposal of a detailed design.

The requirements in Table 1 define the problem to be solved and the boundary conditions that the proposed concept must satisfy. Each requirement is established at a level depending on its priority, divided into Mandatory (M), Level (L) and Desire (D).po

Table 1 – List of requirements and boundary conditions for rail–truck horizontal container transfer

ID	Requirement	Value / Target	Unit	Priority
R1	Enable horizontal transfer of an ISO container between railway wagon and truck, for loading and unloading	–	–	M
R2	Handle the specified container size (ISO container)	6,06 (length) x 2,44(width) x 2.59 (height)	m	M
R3	Provide height adjustment so the horizontal transfer can be performed effectively	≥ 0.3 (minimum vertical movement)	m	M
R4	Handle the maximum allowed container weight	30 480	kg	M
R5	Consider the total handled mass (payload + system mass that is carried/transported as part of the operation)	30 480 kg + platform/system mass	–	M
R6	Remain functional under a reasonable load eccentricity (uneven packing)	±5% of container length	–	D
R7	Limit deflection of the horizontal support structure under load	≤ 0,5	mm	M
R8	Be compatible with the rail infrastructure geometry where it operates (track spacing)	3,35	m	L
R9	Be compatible with the rail gauge (track width) where it operates	1,579	m	D
R10	Be suitable for outdoor operation	–	–	M
R11	Provide an emergency stop / braking function	–	–	M

This report first describes the geometric relationships, force, and moment, equilibriums of our solution. From these equations, the force and moments requirements for the horizontal transfer system and the height adjustment mechanism can be determined, which equations have been evaluated in MATLAB. Next, it presents the required components for the systems, and FEM analyses. Finally, it presents the alternative solutions for the horizontal transfer system and the height adjustment mechanism, and conclusions.

2. Alternative solutions

Since the required motions to transfer the container horizontally can be divided into vertical and horizontal parts two morphological matrixes were created to generate a wide range of possible solutions. One for the horizontal movement that transfers the containers, including possible required supports, see Table 2.

Table 2 – Morphological matrix for the horizontal movement

Function	**S1**	**S2**	**S3**	**S4**	**S5**
Horizontal support	Concentric telescopic arm	Parallel telescopic arm	Massive beam		
Load transfer	Platform	Directly on arms			
Vertical support	Resting on wagon	Pushing down on ground	Scissor lift	Screw jack	
To actuate/drive horizontal support	Hydraulic cylinder	Pinion and rack	Screw	Wheels	Rotation
Load transfer movement	Pinion and rack	Rails	Wheels	Pulleys	
To actuate/drive vertical support	Motor	Hydraulic cylinder	Pneumatic cylinder		
To actuate/drive load transfer	Motor	Hydraulic cylinder	Pneumatic cylinder		

The second matrix, see Table 3, is for the vertical movement that lifts the container to allow the horizontal system to move in under the container.

Table 3 – Morphological matrix for the vertical system

Function	**S1**	**S2**	**S3**
Vertical movement	Scissor lift	Screw jack	Cylinders
To actuate/drive vertical movement	Hydraulic cylinder	Electric motor	Pneumatic cylinder
Convert rotational to vertical motion	Bevel gear	Worm gear	
Power-Source	Electric	Hydraulic	Pneumatic

3. The final solution

The final solution, see Figure 2-4, uses hydraulic cylinders placed vertically on the vehicle being offloaded (either a train wagon or a truck). These push the container vertically which allows a track to be extended from the *Ant* underneath the container. This horizontal extension is done with overlapping telescopic arms while still maintaining a level track. The arms are supported after their extension by a vertical screw jack connected to the offloading vehicle (this screw jack provides a base for the arms to rest on. The extension of the telescopic arms is actuated by horizontally placed hydraulic cylinders. After the screw jack is lifted to support the telescopic arms, a platform is driven from the *Ant* to the offloading vehicle and placed underneath the container. In total two of these systems, i.e. two platforms, then carry the container over to the *Ant* and, via an identical mirrored extension system, carry the load to the onloading vehicle. This means that in total the *Ant* contains four pairs of telescopic extension systems, the sides of the ant containing two each. One pair provides support for a single platform therefore two platforms can move between the *Ant* and both the left-hand and right-hand vehicle. In order to accommodate the different sizes of containers, the *Ant* would need to be available with different sizes, with different distances between the pairs of telescopic arms.

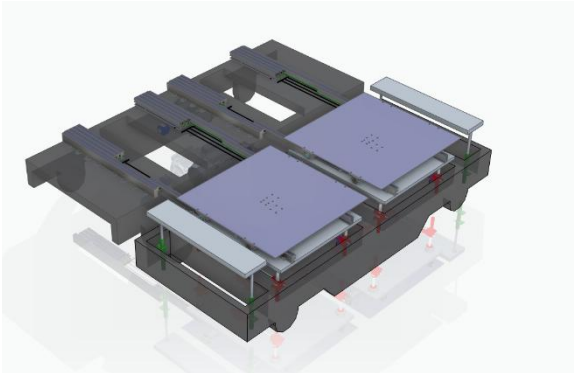

Figure 2 - The system with platform

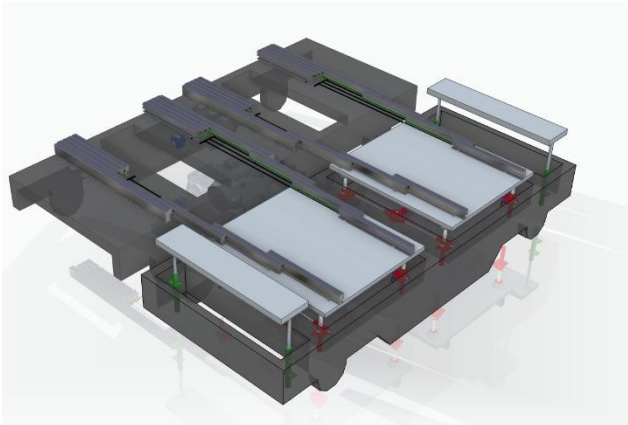

Figure 3 - The system without platform

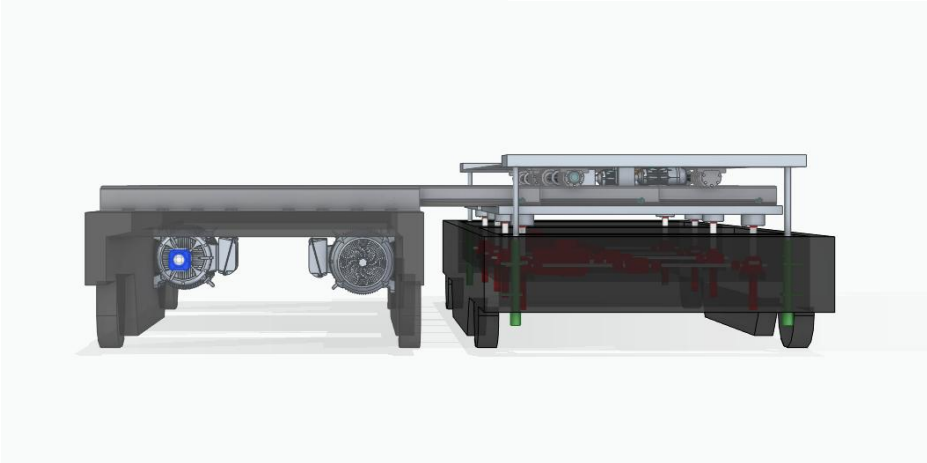

Figure 4 - Arms extracted, and supported with screw jack

According to cargo containers should, in general, not be packed unevenly. When uneven packing occurs, an eccentricity of the center of mass of ±5% of the container's length is acceptable [1]. Therefore, the dimensioning of the final solution considers a 5% uneven load in all the containers directions.

3.1. Geometric and Force Analyses

In the following section the geometric and force analyses of the final concept is presented. These analyses were performed in different stages beginning with a system level analysis. And then breaking the system down into subsystems

3.1.1. System level

Table 1 contains the data provided by the customer as well as data selected by us for system design. The analysis is made assuming the loaded vehicle is a train since that is the more strained condition (loading and unloading trucks will have the same or less demanding conditions)

Table 4 – Data for the system

Name	Value	Unit of measurement
Cargo maximum allowed weight	30 480	kg
Size of ant	2,8	m
Size of train	2,9	m
Size of gap (between ant and train)	0,5	m
Minimum required height adjustment	0,4	m
Width of the supporting platform	2,5	m

In Figure 5 the extension of the entire system is illustrated from the centre point of the *Ant* (an identical, mirrored system is located on the other side on the *Ant*). It shows where the beams connect to each other, how they relate to the *Ant*, the offloading vehicle (in this case a train). It also shows the moving platforms as well as the cargo. Note: not pictured is the support (it is positioned between 2,1 - 4,6 m on the x-axis).

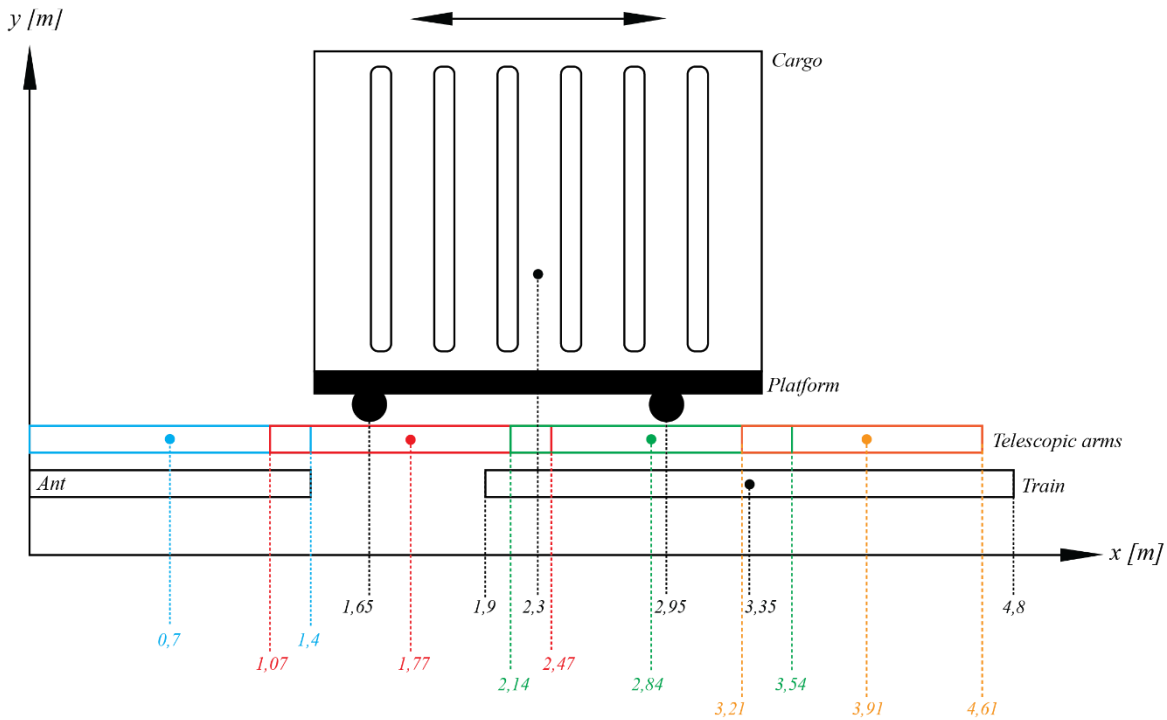

Figure 5 – Geometric relations

For the beams, to reach support on the train (ending at 4.6 m on the x-axis), we must calculate the maximum overlap $L_{overlap}$. Since the max size of a beam is 1.4 m and $3 \cdot 1.4 = 4{,}2$, 4 beams will be required (3 overlaps). We calculate the length of each overlap through Equation (1). L_{beam} is the maximum allowed length of the beam and L is the distance between the *Ant* center point and the edge of the support (4.6 m).

$$L_{overlap} = \frac{4 \cdot L_{beam} - L}{3} \tag{1}$$

This results in $L_{overlap} = 0{,}33\ m$.

3.1.2. Telescopic arms

The analysis of the telescopic arms was divided into two different cases. The first case regards the extension movement and models the arms internal contact forces as well as the expected max deflection before they are supported and the load is placed upon them. The second case regards the max stress and deflection on the beams when they are supported and the load travels across the beam.

3.1.2.1 First Case: Extension Analysis

In Figure 5, the telescopic beams are illustrated as one system with the external forces acting on them. They are shown separately in Figure 7, here also showing the internal contact forces.

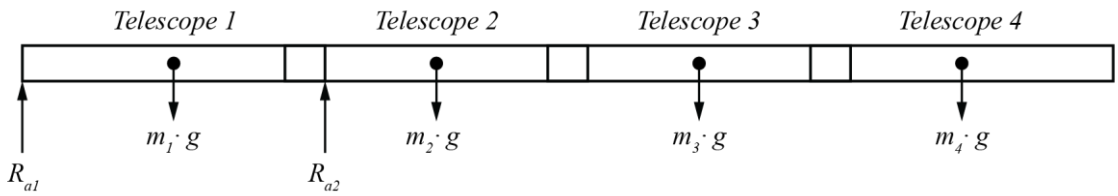

Figure 6 – Telescopic beams

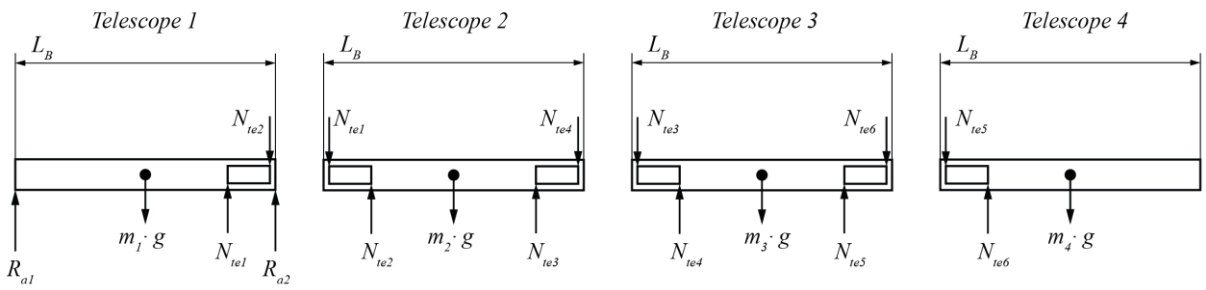

Figure 7 – Free body diagrams of the beams without external load

R_{a1} and R_{a2} are reaction forces originating from the *Ant*, the $m_i \cdot g$ forces are gravitational forces and N_{tei} are the internal contact forces between the beams. The contact between each stage is modelled using static equilibrium.

The physical dimensions of our initial guesses for the telescopic beams and pistons based on early CAD are shown in Table 5.

Table 5 – Physical dimensions of the telescopic beams

Name	**Value**	**Unit of measurement**
Beam length	1,4	m
Piston stroke length	1,07	m
Max telescopic overlap	0,33	m
Distance from overlap center to contact point	0,12	m
Beam_1 weight	62	kg
Beam_2 weight	60	kg
Beam_3 weight	60	kg
Beam_4 weight	60	kg

The hydraulic system is characterised by cylinder bore diameter D, pump flow rate Q, and the required piston force (the specific cylinder that was chosen is recounted in chapter 3,3, its bore diameter $D = 40$ *mm*, and $Q = 23{,}4$ *L/min*). This piston force corresponds to the amount of friction between the telescopic arm contacts. This itself is a product of the friction coefficient and the contact force N_{tei}. These forces are solved numerically through a MATLAB model, see Appendix 1. The model begins with calculating the maximum possible velocity of the pistons, v_{max}:

$$v_{max} = \frac{Q}{A} \tag{2}$$

Where the area A is determined by:

$$A = \frac{\pi D^2}{4} \tag{3}$$

By then assuming an acceleration (and deceleration) time, t_{acc}, of 0,3 seconds the required acceleration a, and distance travelled during both acceleration and deceleration, x_{acc} can be obtained through the standard kinematic relationships:

$$a = \frac{v_{max}}{t_{acc}} \tag{4}$$

$$x_{acc} = \frac{1}{2} a {t_{acc}}^2 \tag{5}$$

The distance travelled at max constant velocity, x_{const}, is then obtained with the stroke length L:

$$x_{const} = L - 2x_{acc} \tag{6}$$

This allows the time at constant velocity, t_{const}, as well as total extension time t, to be calculated:

$$t_{const} = \frac{x_{const}}{v_{max}} \tag{7}$$

$$t = 2t_{acc} + t_{const} \tag{8}$$

This results in the total extension time $t = 3{,}7$ *s* as well as providing a continuous time vector associated with all sampled extension positions (the position of the extension was divided and analysed in 100 steps).

At each sampled extension position, the MATLAB program solves a system of static equilibrium equations for all four beam stages. For each beam, two equilibrium equations are imposed: a vertical force equilibrium and a moment equilibrium about the beam's left support:

$$\sum F_y = 0; \ \sum M = 0 \tag{9}$$

These equations include the support reactions (R_{A1}; R_{A2}), contact forces between the beams (N_{te1} to N_{te6}), gravitational forces from each beam ($m_1 \cdot g$ to $m_4 \cdot g$).

Once the contact forces are obtained, friction forces along each beam interface are computed using a Coulomb friction model:

$$F_{fi} = \mu N_{tei} \tag{10}$$

Assuming a lubricated metal interface with $\mu = 0{,}1$, the required piston force F_{Pi} from each hydraulic piston can be determined.

$$F_{P1} = F_{f1} + F_{f2} \ ; \ F_{P2} = F_{f3} + F_{f4} \ ; \ F_{P3} = F_{f5} + F_{f6} \tag{11}$$

The derived minimum required piston forces are $F_{P1} = 2{,}32\ kN$; $F_{P2} = 1{,}02\ kN$; $F_{P3} = 0{,}25\ kN$.

To confirm the validity of the numerical solution, all equilibrium equations are recomputed using the solved forces. The maximum error found in the equations are presented in Table 6.

$$\sum F_y = 0; \ \sum M = 0 \tag{12}$$

Table 6 – Max error of equilibrium equations

Max Error of Force Equations [N]	**Max Error of Moment Equations [Nm]**
$1{,}137 \cdot 10^{-12}$	$2{,}729 \cdot 10^{-12}$

Additionally, the maximum deflection during extension can be estimated using the elementary case of a cantilever beam, supported on one end at the edge of the *Ant*, and free at the other (see Figure 8). The beam is modelled with a single load, F_{cb} (the combined mass) acting at the systems center of mass, β.

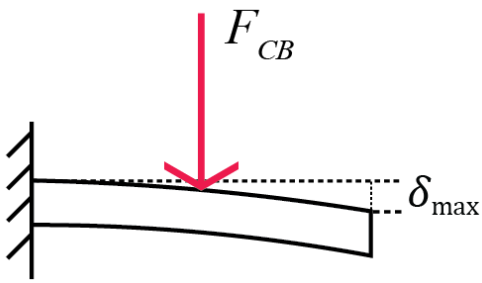

Figure 8 – Cantilever beam

Assuming a rectangular cross section with a width $b = 75\ mm$ and a height $h = 90\ mm$, the moment of inertia, I, can be determined.

$$I = \frac{bh^3}{12} \tag{13}$$

Assuming that the beams are made in steel with a Young's modulus $E = 210\ GPa$, allows for the deflection at the end of the beam to be calculated using the following formula:

$$\delta_{\max} = \frac{F_{cb} \cdot {L_{cb}}^3}{6EI} \cdot (-\beta^3 + 3\beta^2) \tag{14}$$

Where $\delta_{\max}$ is the maximum deflection and becomes 5,09 mm.

3.1.2.2. Under load analysis

To determine the bending stresses and structural deflection experienced by the platform and the telescopic beams a worst-case loading scenario is assumed where a single wheel carries load to a telescopic beam in the middle of its supports (additionally the container's centre of mass is offset by 5%). The geometric parameters that define the system is shown in Table 7 and illustrated in Figure 9.

Table 7 – Geometric parameters

Sign	Name	Value	Unit of measurement
L_p	The distance between the two-wheel sets	1,3	m
L_f	Length of free-standing beam	0,7	m
b_c	Width of container	2,44	m

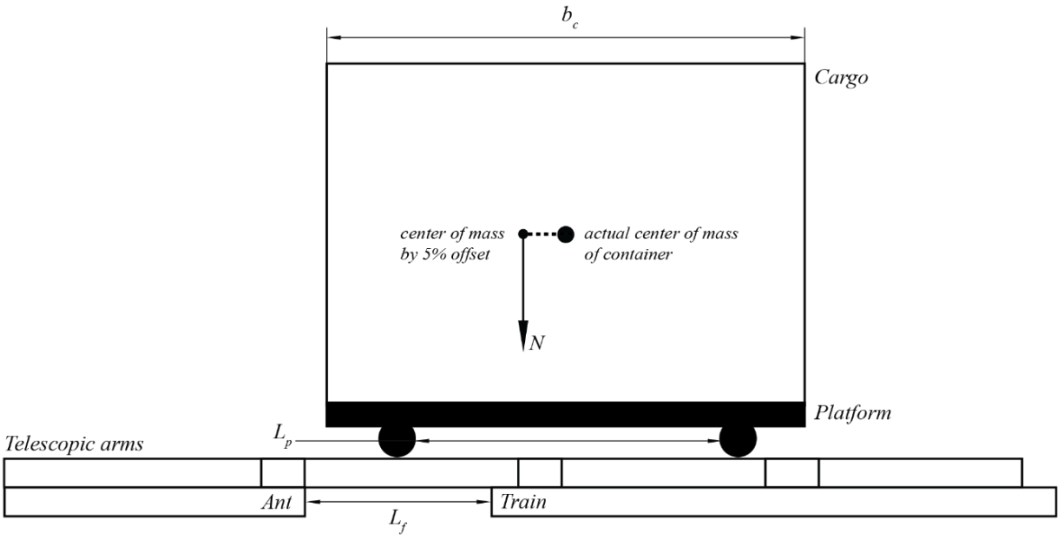

Figure 9 - The system under load

MATLAB was again used to analyse the system and solve the resultant equations, see Appendix 2. The free body diagram of the cargo is illustrated in Figure 10.

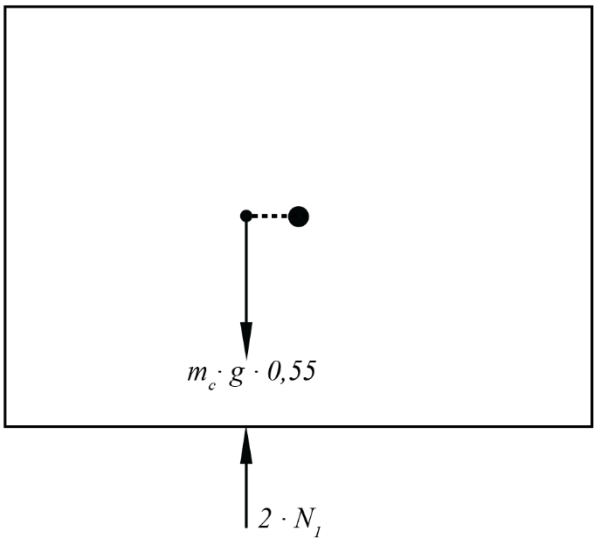

Figure 10 - Free body diagram of cargo

The vertical equilibrium of the container gives the load transmitted to the two platform units $2 \cdot N_1$, in which the weight of the container m_c = 30 480 kg, and 0,55 is the 5% offset lengthwise (15).

$$\sum F_y = 0 : \; 2 \cdot N_1 - \; 0{,}55 \; \cdot m_c g \tag{15}$$

The 5% offset in weight in width is accounted for by an offset of the load N_1 on the platform, L_{off}:

$$L_{off} = b \; \cdot 0{,}05 = \; 0{,}122 \text{ m.} \tag{16}$$

In Figure 11, the free body diagram of one of the platforms is illustrated.

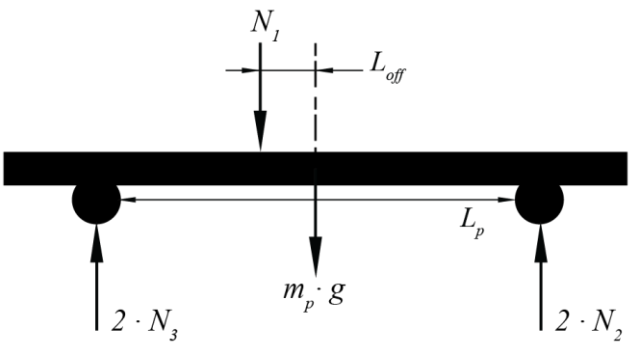

Figure 11 - Free body diagram of the platform

Assuming an initial platform weight m_p = 500 kg, the contact loads on the wheels and conversely on the beam can be calculated (since the platform has two front and two rear wheels both N_3 and N_2 are multiplied by two). To calculate the maximum contact force on the wheel the equations for the vertical force equilibrium and the moment equilibrium about the right wheel can be solved:

$$\sum M_{rw} = 0 : \; \frac{L_p}{2} \cdot m_p \cdot g + \left(\frac{L_p}{2} + L_{off}\right) \cdot N_1 - L_p \cdot 2 \cdot N_3 \tag{17}$$

$$\sum F_y = 0 : 2 \cdot N_3 - N_1 - m_p \cdot g + 2 \cdot N_3 \tag{18}$$

Combining these equations allows solving for N_3:

$$N_3 = \frac{\left(\frac{L_p}{2} \cdot m_p \cdot g + \left(\frac{L_p}{2} + L_{off}\right) \cdot N_1\right)}{L_p \cdot 2} \tag{19}$$

Solving (19) gives the maximum contact force N_3 = 50,11 kN.

In Figure 12, the free body diagram of the free-standing beam is illustrated.

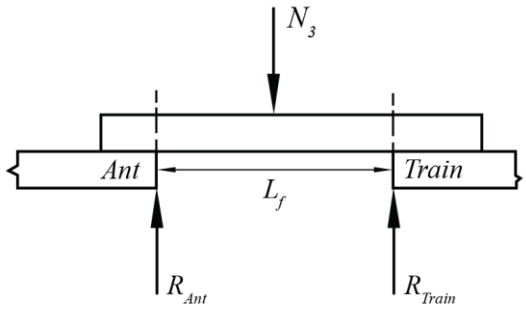

Figure 12 - Free body diagram of the free-standing beam

The beam experiences equal reactions at both ends because the platform load acts symmetrically over the beam span. Therefore:

$$R_{Ant} = R_{Train} = \frac{N_3}{2} \tag{20}$$

To get an estimate on the deflection and stress experienced by the telescopic beam at its most crucial point the beam can be modelled as an elementary case of a free-standing beam with the previously calculated contact force acting in the middle. The equation for the maximum deflection then becomes:

$$\delta_{\max} = \frac{N_3 \cdot {L_f}^3}{48EI} \tag{21}$$

Using the same parameters as was used in (21) gives $\delta_{\max} = 0.37\ mm$.

Assuming that the bending moment is dimensioning means that the minimum required height, *h* can be expressed as:

$$h = \frac{6M_B}{b \cdot \sigma_{\text{till}}} \tag{22}$$

Where M_B is the maximum bending moment and can be found to be:

$$M_B = \frac{L_f}{2} \cdot \frac{N_3}{2} \tag{23}$$

σ_{till} in (22) is the allowable stress and, here, derives from the materials yield strength divided by a chosen safety factor. This safety factor is initially chosen through Pugsley's safety factor approach, see Figure 13 and becomes chosen to be 2,76. Together with assuming a regular steel yield strength of 310 MPa, the allowable stress results in 112,3 MPa and subsequently the minimum required height becomes: 79,03 mm. Notably this is smaller than our previously assumed dimensions for the height of the beams.

Table 1.1 Safety factor characteristics A, B, and

Characteristic[a]		B = vg	B = g	B = f	B = p
A = vg	C = vg	1.1	1.3	1.5	1.7
	C = g	1.2	1.45	1.7	1.95
	C = f	1.3	1.6	1.9	2.2
	C = p	1.4	1.75	2.1	2.45
A = g	C = vg	1.3	1.55	1.8	2.05
	C = g	1.45	1.75	2.05	2.35
	C = f	1.6	1.95	2.3	2.65
	C = p	1.75	2.15	2.55	2.95
A = f	C = vg	1.5	1.8	2.1	2.4
	C = g	1.7	2.05	2.4	2.75
	C = f	1.9	2.3	2.7	3.1
	C = p	2.1	2.55	3.0	3.45
A = p	C = vg	1.7	2.15	2.4	2.75
	C = g	1.95	2.35	2.75	3.15
	C = f	2.2	2.65	3.1	3.55
	C = p	2.45	2.95	3.45	3.95

[a]vg = very good, g = good, f = fair, and p = poor.
A = quality of materials, workmanship, maintenance, and inspection.
B = control over load applied to part.
C = accuracy of stress analysis, experimental data, or experience with similar parts.

Table 1.2 Safety factor characteristics D and E

Characteristic[a]		D = ns	D = s	D = vs
E =	ns	1.0	1.2	1.4
	s	1.0	1.3	1.5
	vs	1.2	1.4	1.6

[a]vs = very serious, s = serious, and ns = not serious
D = danger to personnel.
E = economic impact

1Figure 13 - Pugsley' safety factor

Given the very high contact force between the wheel and the beam, an analysis of the Hertz contact pressure is prudent. Given the length of contact $L = 75\ mm$ the contact area half-width can be calculated by analysing the contact as a contact between two cylinders. Calculating the reduced radius R, is done through the following equation:

$$\frac{1}{R} = \frac{1}{R_1} + \frac{1}{R_2} \tag{24}$$

R_1 and R_2 are the radii of the cylinders. Since R_2 tends towards infinity (the track on the beam is straight) the reduced radius $R = R_1$, that is, equal to the radius of the wheel (the chosen wheel is recounted in chapter 3.3 Chosen Components, ultimately the wheel has a diameter of 160 mm).

To obtain the half-width the reduced modulus of elasticity is required. It is given by:

$$\frac{1}{E^*} = \frac{1-\vartheta_1^2}{E_1} + \frac{1-\vartheta_2^2}{E_2} \tag{25}$$

With both materials in steel ($E_{1,2} = 210\ GPa$, $\vartheta_{1,2} = 0{,}3$) $E^* = 115{,}4\ GPa$.

The contact half-width, b can now be calculated with the following formula (where $F = N_3$):

$$b = \sqrt{\frac{4FR}{\pi L E^*}} \tag{26}$$

With the previously defined values the half-width comes out to be $b = 0{,}768\ mm$.

With the half-width calculated the maximum contact pressure p_0, is given by:

$$p_0 = \frac{2F}{\pi L b} \tag{27}$$

This computes to be 553.8 MPa. From this value we can, through a rough rule of thumb approach, derive the required material hardness. To get a given materials maximum allowed contact pressure as a function of its Vickers hardness *HV*, as well as the recommended maximum contact pressure (with a safety factor), p_{rec} , the following rules of thumb can be used:

$$p_0 = \frac{10HV}{3} \tag{28}$$

$$p_{rec} = \frac{10HV}{5} \tag{29}$$

To solve for the required Vickers hardness given our previously calculated pressure, these can instead be expressed as HV_0 and HV_{rec} (the minimum required hardness, and recommended minimum respectively):

$$HV_0 = \frac{3p}{10} \tag{30}$$

$$HV_{rec} = \frac{5p}{10} \tag{31}$$

With the given pressure $p = p_0$, $HV_0 = 166{,}14$ and $HV_{rec} = 276{,}9$.

In general, many common industrial-grade steels fulfil HV_0 and can, depending on condition and heat treatment exceed HV_{rec}.

3.1.3. Vertical lift

The vertical lifting aspects of the were further broken down in two, one regarding the lifting of the container and the other regarding the support of the telescopic arms.

3.1.3.1. Required piston forces

In Figure 14, we can see the free body diagram of the vertical lift, and we can write up the vertical equilibrium for it (32).

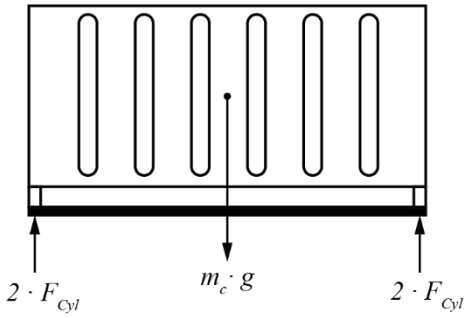

2Figure 14 - Free body diagram of the vertical cylinders

$$\sum F_y = 0 : 4 \cdot F_{Cyl} - m_c g \tag{32}$$

With Equation (32) we have the required piston force $F_{Cyl} = 74{,}752$ kN, if the load from the container was equal. However, we assume the worst-case scenario, i.e., that the center of gravity of the container shifts by 5% in both the X and Y directions, therefore the required piston force is:

$$F_{Cyl} \cdot \frac{0{,}55}{0{,}5} \cdot \frac{0{,}55}{0{,}5} \Rightarrow F_{Cyl} = 90{,}45\ kN. \tag{33}$$

3.1.3.2. Screw jack requirements

In Figure 15, the free body diagram of the screw jack system illustrated. It is represented as the black block, and it is divided into 4 individual screws with equal forces F_{Screw}.

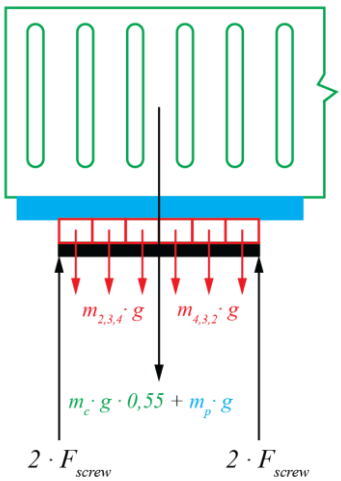

3Figure 15 - Free body diagram of the screw jack system

Setting up the vertical force equilibrium for the screw jack (assuming conservatively that the entire mass of 3 of the telescopic beams are distributed to the supporting screw jack), we can get the required force per screw.

$$\sum F_y = 0 : 4 \cdot F_{Screw} - m_c g \cdot 0{,}55 - 2 \cdot (m_2 \cdot g + m_3 \cdot g + m_4 \cdot g)$$

$$F_{Screw} = \frac{0{,}55 \cdot m_c \cdot g + m_p \cdot g + 2 \cdot g \cdot (m_2 + m_3 + m_4)}{4} \tag{34}$$

Therefore, from Equation (34), the required force per screw is F_{Screw}= 43, 25 kN.

3.2. FEM Analysis

To verify and refine results in crucial parts of the final solution a FEM analysis was made using the software Ansys Workbench. In the following section the details and results of this analysis are presented.

3.2.1. Telescopic arms

As previously mentioned, the telescopic arms (specifically the second arm) experience the worst-case conditions when a wheel with 50,11 kN load is in the middle of the gap between the support on the *Ant* and the support on the offloading vehicle. The purpose of the FEM analysis is to determine how this, quite significant, load affects both the deflection, and the stress experienced, and thereby choose appropriate materials for the construction of the telescopic arms. Note that the design of the cross section of the telescopic arms is unlike the assumed cross section during previous analyses. The beams are not rectangular as previously assumed, nor are they filled. Instead, they are hollow but with significantly larger circumference.

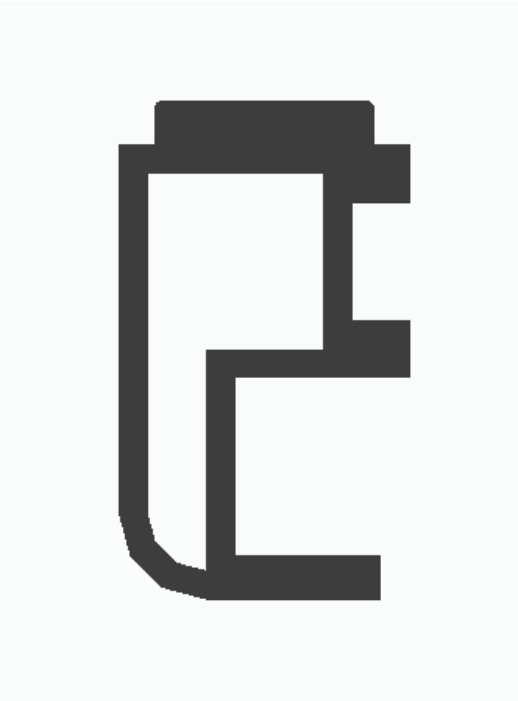

Figure 16 – Cross section of telescopic arm

To accurately model the behaviour of the beam under load, proper conditions need to be set. Since the modelled beam is only the part of the beam between supports, the supports were modelled as acting on the end face of the beam constraining the following degrees of freedom: U_X, U_Y, U_Z, as well as rotation about the X-axis, and Z-axis, see Figure 17. The load was modelled as 50,11 kN acting on the previously derived Hertz contact area, in the middle of the beam, and with material properties of steel.

The generated mesh consisted of using a tetrahedron pattern with an element size of 20 mm across the majority of the beam, the exception being a patch in immediate vicinity of the load (20 mm from the center of the beam on either side), see Figure 17. This area was initially meshed with an element size of 2 mm; however, this was iterated down to 0,155 mm in search of a convergence, the iteration can be found in Appendix 5.

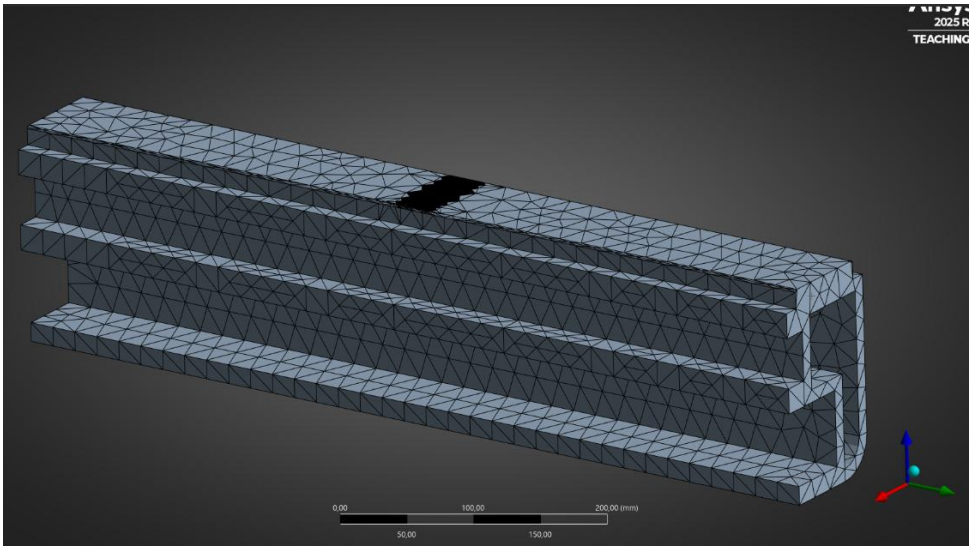

Figure 17 – Mesh of the beam, X – red, Y – green, Z - blue

The final number of elements was 559 979. With these, the result for the deflection (analysed in the Z-direction) is a maximum of 0,1893 mm, this can be seen in Figures 18 and 19.

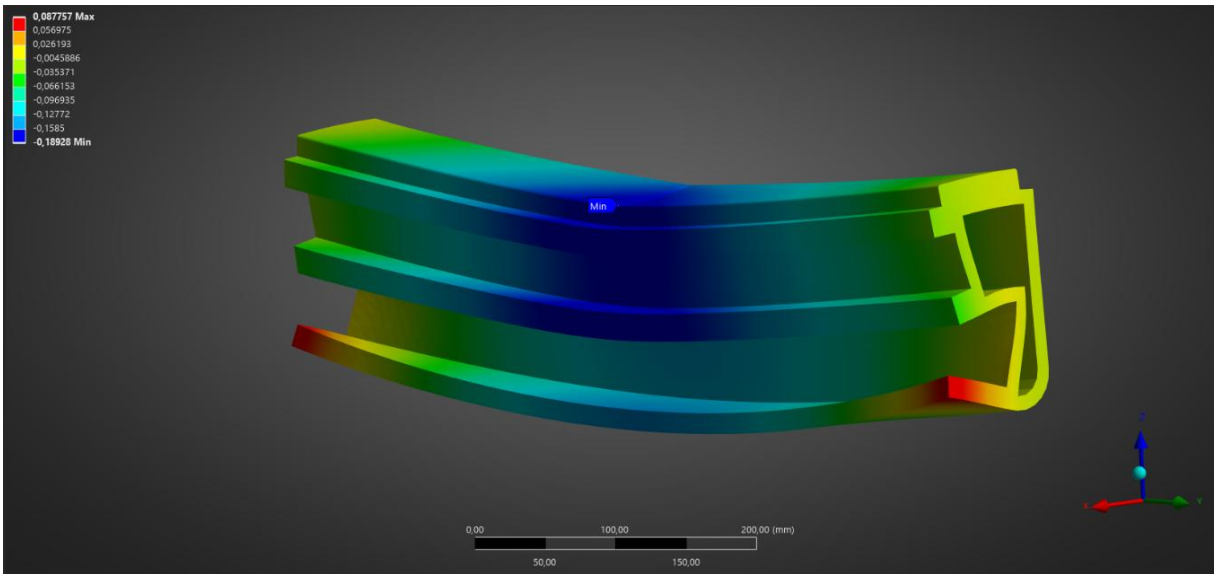

Figure 18 - Result for the deflection (analysed in the Z-direction)

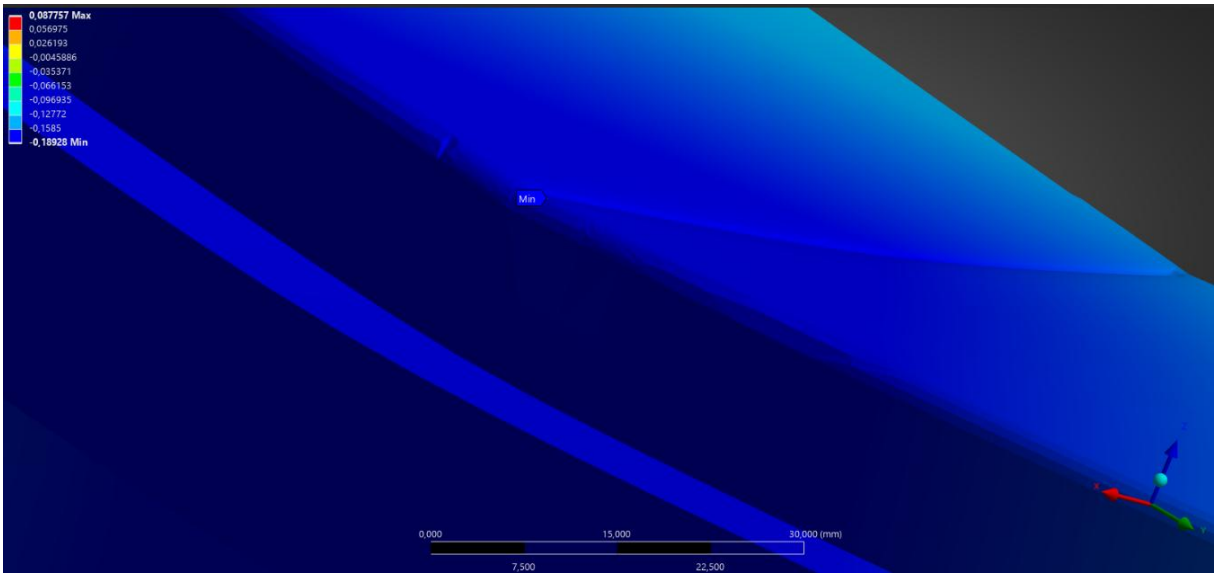

Figure 19 - Result for the deflection (analysed in the Z-direction)

This figure is not dissimilar to the earlier predicted deflection of 0,37 mm. Either of these deflections should realistically be acceptable.

The result for the von Mises equivalent stress was ultimately 305,6 MPa and acts slightly underneath the contact point. This can be seen in Figures 20 and 21.

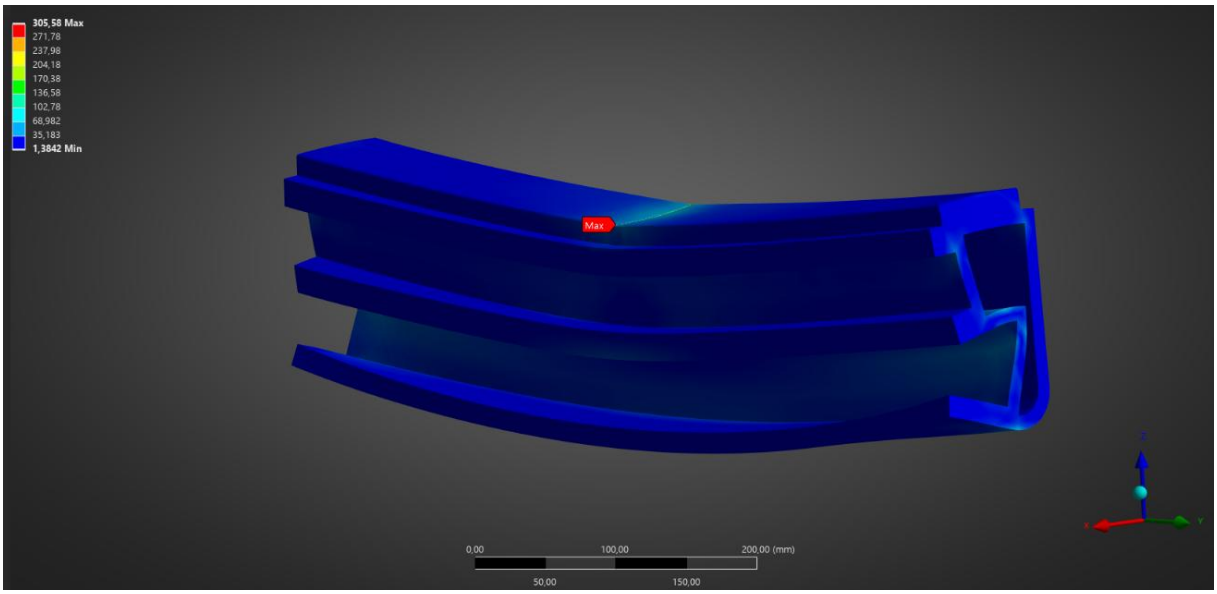

Figure 20 - Result for von Mises equivalent stress

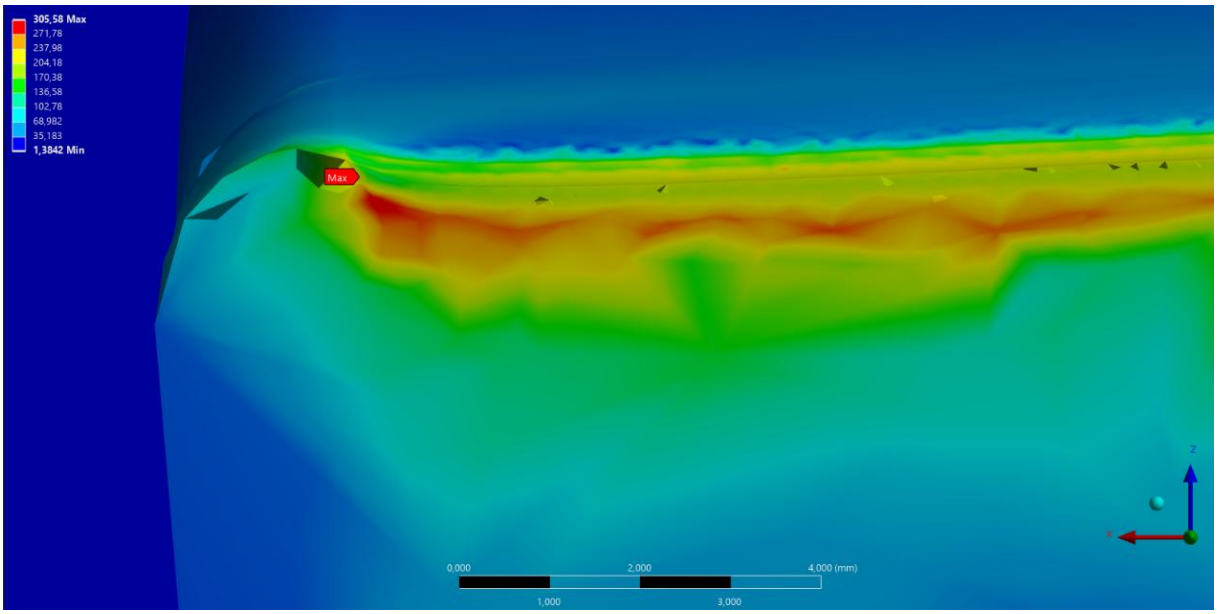

Figure 21 - Result for von Mises equivalent stress

Being that von Mises equivalent stress combines normal and shear stress it is not unexpected that the maximum stress is found underneath the contact. Something that will be discussed later is the lack of convergence for the stress. This entails more uncertainty on the final value, therefore the maximum value of 335,2 MPa (encountered at mesh size 0,17 mm) will instead be dimensioning.

3.2.2. Platform

The FEM analysis of the platform is mainly done with the purpose of minimizing the weight of the platform and to explore if a thin platform, 15 mm, can handle the load without large deflections nor danger of yielding. This is particularly important since the platform is fitted with a motor and 16 wheels

in total which will significantly increase the total weight. Standard was chosen as the material of the platform because of its favourable density to yield strength ratio.

The conditions for the platform were chosen as follows: support is provided at each of the bearing houses bore via cylindrical support, the applied load is 55% of the max weight of the container and acts as a rigid force on the entire platform (since the container will not deform).

The generated mesh consisted of using the multizone mesh feature with an element size of 150 mm across the top and bottom face of the platform while the rest of the edges and faces used an element size of 10 mm, later iterated down to 5,75 mm in search of a convergence, this can be seen in Figure 22 (for convergence study, see Appendix 5.

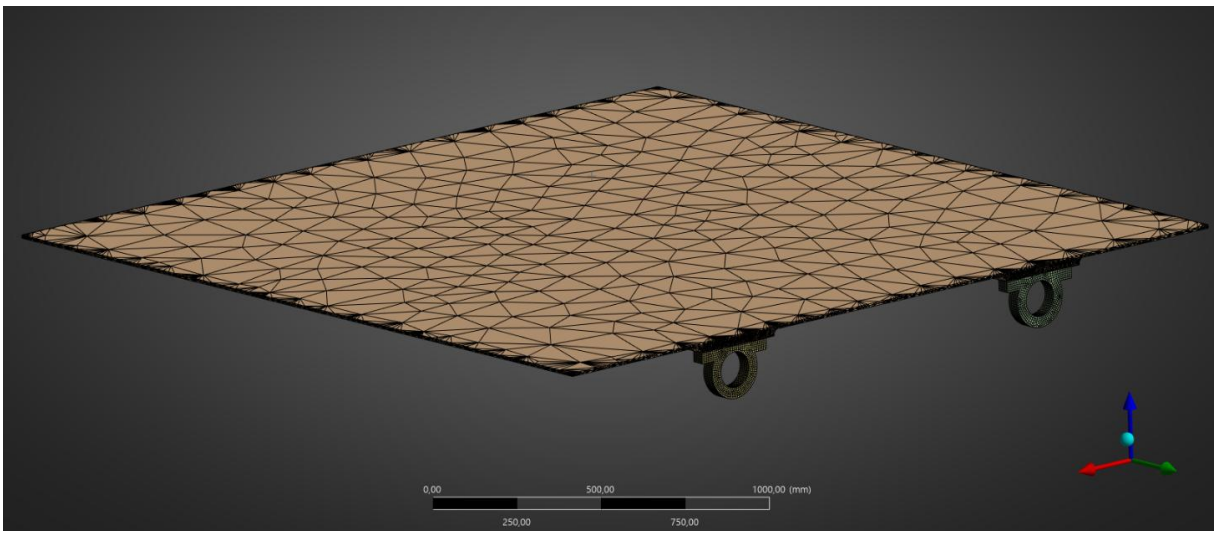

Figure 22 - Generated mesh consisted of using the multizone mesh feature

The final number of elements was 37 530. Using this size generated a max deformation of 0,0047 mm, this can be seen in Figures 23 and 24.

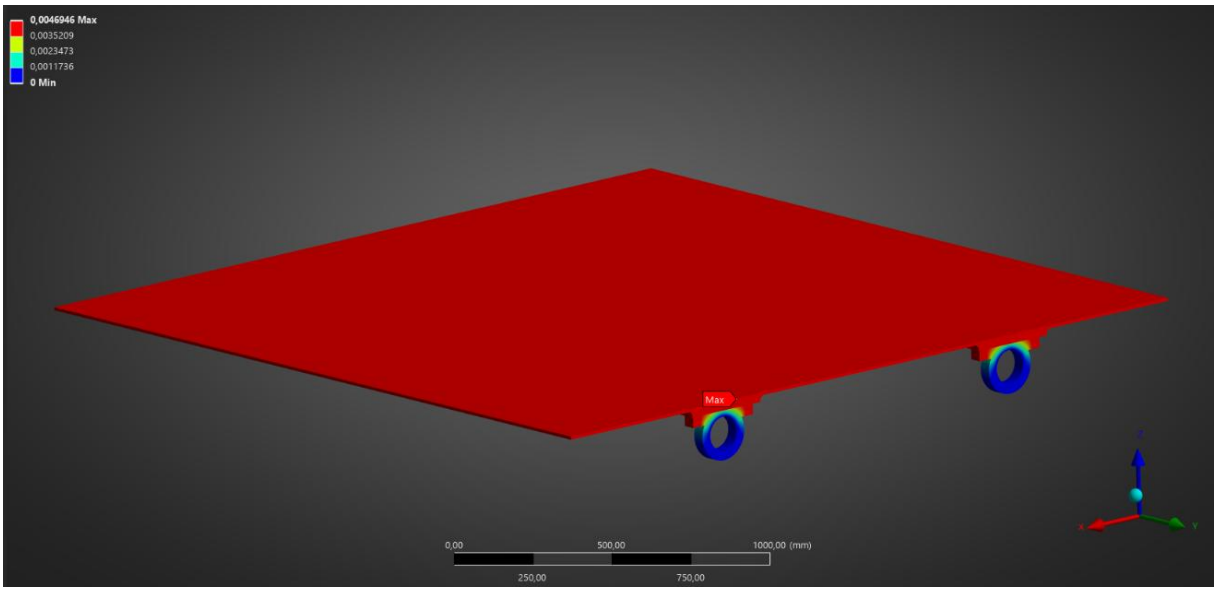

Figure 23 – Maximum mesh deformation

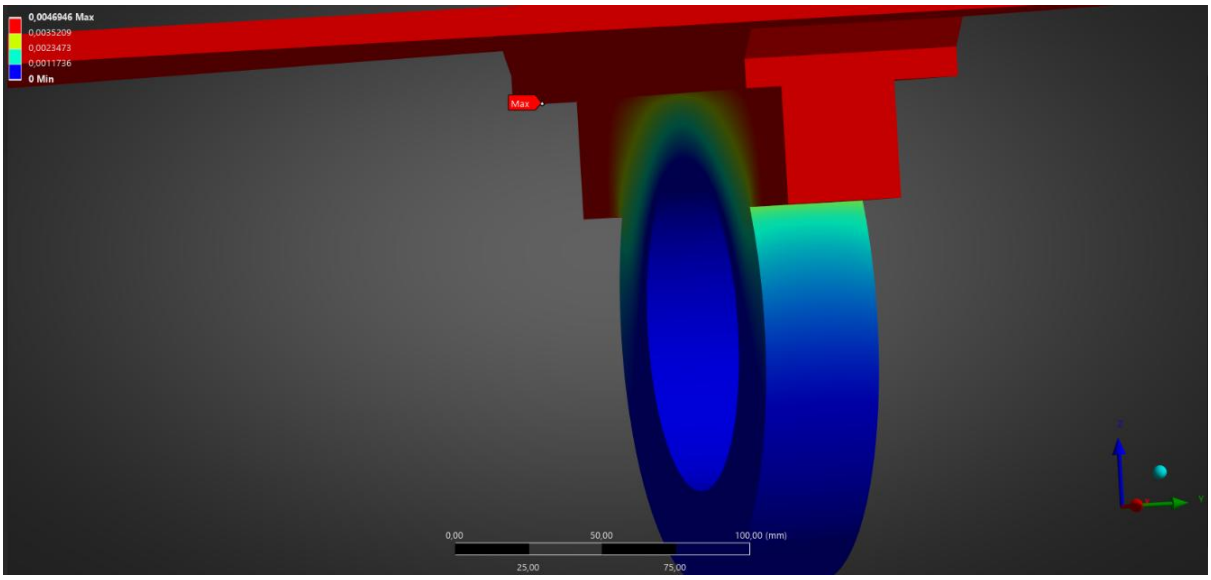

Figure 24 - Maximum mesh deformation

This miniscule deformation is likely due to the rigid force which theoretically is transferred directly to the supports without deforming the platform much.

The maximum von Mises equivalent stress was found to be 14,25 MPa and can be seen in Figures 25 and 26.

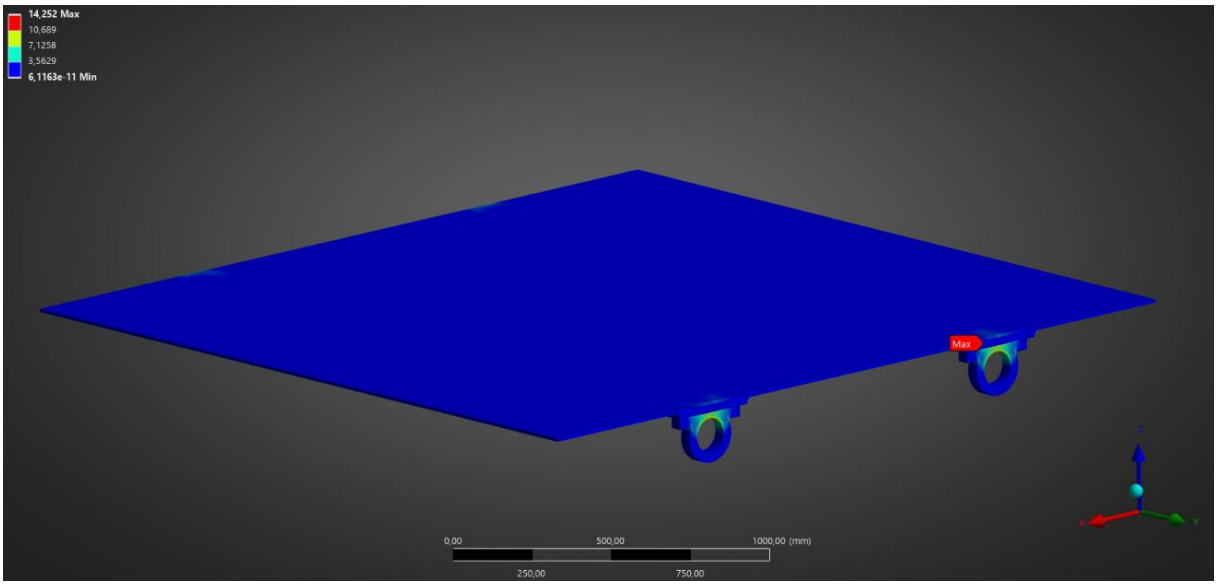

Figure 25 - Maximum von Mises equivalent stress

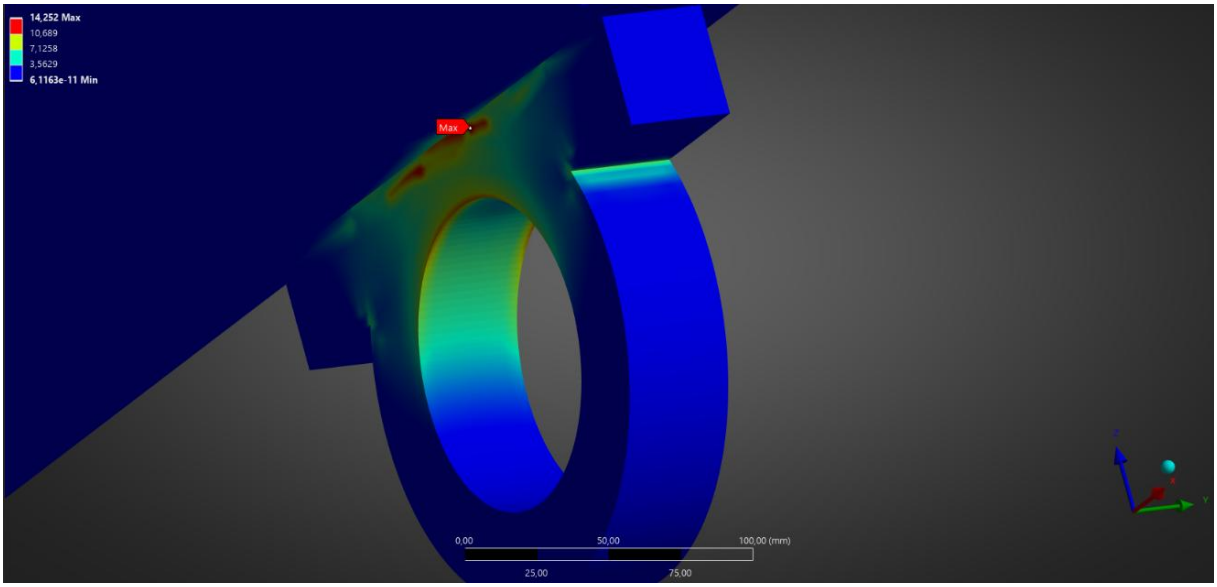

Figure 26 - Maximum von Mises equivalent stress

The maximum stress being found near the supports also supports the notion that the load is transferred directly through the bearing house into the support.

Conclusively the maximum deflection and equivalent stress are well below acceptable levels, even without devising safety factors. Thus, the chosen material and thickness is indeed acceptable for the purpose of the platform. Those choices render the weight of the platform (without the added wheels, motor and bearing houses which are in steel) to be 171,82 kg

3.3. Chosen components

In the following sections calculations for dimensioning and choosing components for all the subsystems are presented.

3.3.1. Telescopic arms

The telescopic arms components consist of a hydraulic cylinder, with corresponding pump and motor, and glide blocks, that take the internal contact forces shown in Figure 7.

3.3.1.1. Hydraulics cylinders

The maximum occurring extracting forces are $F_P = 2{,}32\ kN$. We assume that the operating pressure of the system P is 200 bar, referencing to ISO 4413:2010 [2]. By knowing the operating pressure P and the minimum required load F_P, we can calculate the minimum required piston area A_P with Equation (35).

$$P = \frac{F_P}{A_P} \tag{35}$$

This results A_P = 1,16 cm^2.

The chosen hydraulic cylinders are double-acting, mill type from the CDH1 series from Bosch Rexroth, and the cylinders characteristics are summarized in Table 8 [3].

Table 8 - Cylinder characteristics

Name	Value	Unit of measurement
Cylinder bore diameter	40	mm
Cylinder rod diameter	22	mm
Stroke maximum velocity	0,31	m/s
Piston area	12,56	cm^2
Max extension force	31,4	kN

3.3.1.2. Pump & motor

For supplying the hydraulic cylinders, we had to determine the maximum required pump flow Q with Equation (36).

$$v_{max} = \frac{Q}{A} \tag{36}$$

This results Q = 23,4 L/min for every cylinder. As we use one pump per platform, it must supply 12 cylinders at the same time:

$$Q_{Total} = Q \cdot 12 \tag{37}$$

That means that our Q_{Total} ~ 280 L/min.

The chosen pump is the internal gear pump PGH5-3X/100LR11VU2, size 100 by Bosch Rexroth [3]. Its maximum flow capacity $Q_{max} = 300$ L/min safely exceeds the total required system flow. The maximum drive power of it is 129 kW.

Therefore, to drive the hydraulic pump, a WEG W22 Motor, 2 poles (3000 rpm), 50 Hz, with TEFC (IC411) cooling was selected [4]. The selected 132 kW motor exceeds the required pump power; therefore, the hydraulic flow is limited to the required flow value using a control valve.

3.3.1.3. Sliding blocks

When the telescopic arms are extended, they are supported by two gliding blocks. One of these blocks can be seen in Figure 27. With the corresponding dimensions in Table 9.

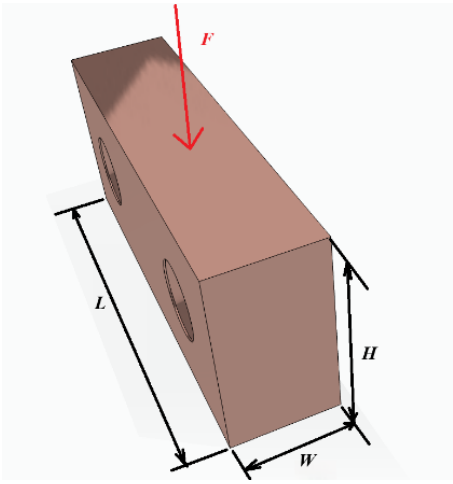

Figure 27 – Gliding block

Table 9

Sign	Name	Value	Unit of measurement
H	Block height	39	mm
L	Block length	90	mm
W	Block width	20	mm
F	Internal contact force from the telescopic arm	12480	N

To the determine the material of the blocks, the contact pressure they experience needs to be calculated. This is done through Equation (38).

$$p = \frac{F}{A} \tag{38}$$

Where *A* is the contact area defined by Equation (39).

$$A = L \cdot W \tag{39}$$

Using Equation (38) and (39) in combination with the extension speed of the hydraulic cylinder, see Table 8, the pv-value can be calculated in accordance with Equation (40).

$$pv - value = p \cdot v \tag{40}$$

With the result, pv-*value* = 2,14 MPa m/s.

This led to choice of sintered lead bronze, even though it has a maximally allowed pv-value of *1,8 MPa m/s*. But if the block is lubricated during maintenance this value can be surpassed, at the cost of the lifetime of the block [5].

The results for Equation (35) - (40) are summarized in Table 10.

1Table 10 - Results of Equations

Eq	Sign	Name	Value	Unit of measurement
35	A_P	Minimum required piston area	1,16	cm^2
36	Q	Flow per cylinder	23,4	L/min
37	Q_T	Total flow rate	280	L/min
40	-	pv-value	2,14	MPa m/s

3.3.2. Platform

The platforms components consist of a motor, along with corresponding gearbox and chain, wheels, shafts and bearings.

3.3.2.1. Motor

The input data used for the dimensioning of the platform drive system are listed in Table 11. These parameters define the transported mass, rolling conditions, motion requirements, and wheel geometry used in the subsequent analysis.

Table 11 – Parameters for motor and gearbox platform calculations

Sign	Name	Value	Unit of measurement
m_c	Cargo mass experienced per platform unit (incl. 5% offset)	16 764	kg
m_p	Platform mass	500	kg
m_T	Mass experienced per platform unit	17 264	kg
C_{rr}	Rolling resistance coefficient	0,002	–
θ	Track inclination angle	0	rad
g	Gravitational acceleration	9,81	m/s^2
d	Travel distance	4,01	m
t_{tr}	Total travel time	10	s
t_{acc}	Acceleration time	4	s
D_W	Wheel diameter	0,16	m
r_W	Wheel radius	0,08	m
n_{drv}	Number of driven wheels	4	–

The platform motion is defined by a prescribed travel distance and total travel time, with symmetric acceleration phases. The calculations were carried out using MATLAB; the corresponding script and numerical implementation are presented in Appendix 3.

The platform velocity is obtained from the imposed motion time as:

$$v = \frac{d}{t_{tr} - t_{acc}} \tag{41}$$

Using the input data in Table X, the resulting maximum velocity is $v = 0{,}668\ m/s$

The corresponding linear acceleration during the acceleration phase is

$$a = \frac{v}{t_{acc}} \tag{42}$$

which gives $a = 0{,}167\ m/s^2$.

The total rolling resistance force acting on one platform unit is

$$F_{rr} = C_{rr} \cdot m_T \cdot g \tag{43}$$

which results in $F_{rr} = 341{,}3\ N$.

Since the platform is assumed to move on a horizontal track, the gravitational component along the travel direction becomes

$$F_s = m_T \cdot g \cdot sin\,\theta \tag{44}$$

Giving $F_s = 0\ N$.

The force required to accelerate the system mass is

$$F_a = m_T \cdot a \tag{45}$$

Which yields $F_a = 2{,}91\ kN$.

The total required traction force at the wheels is therefore

$$F_T = F_{rr} + F_s + F_a \tag{46}$$

Resulting in $F_T = 3{,}25\ kN$.

The required torque per driven wheel is determined from the total traction force as

$$T_w = \frac{F_T \cdot r_w}{n_{drw}} \tag{47}$$

Which gives $T_w = 65\ Nm$. With two wheels mounted on each driven shaft, the required torque per shaft becomes

$$T_s = 2T_w \tag{48}$$

Leading to $T_s = 130\ Nm$. With two shafts on each platform the torque per platform, T_{out}, becomes

$$T_{out} = 2T_s \tag{49}$$

Leading to $T_{out} = 260\ Nm$. The wheel rotational speed corresponding to the target linear velocity is obtained from

$$n_w = \frac{60 \cdot v}{2\pi \cdot r_w} \tag{50}$$

Which results in $n_w = 79{,}78\ rpm$.

The chosen motor is a WEG W22 Brake Motor, rated 2,2 kW, 4 poles, 50 Hz, with TEFC (IC411) cooling and B34T mounting arrangement [6]. The integrated electromagnetic brake is used to hold the platform position during standstill.

The nominal motor data used for verification are summarized in Table 12.

Table 12 – Nominal data of the selected platform motor

Name	**Value**	**Unit of measurement**
Rated power	2,2	kW
Rated frequency	50	Hz
Number of poles	4	–
Rated speed	1 500	rpm
Assumed speed, due to slip	1430	rpm
Rated torque	14,7	N m
Cooling method	IC411 (TEFC)	–
Protection class	IP55	–
Mounting arrangement	B34T	–
Brake type	Electromagnetic	–

Using the wheels rotational speed in combination with the assumed speed of the motor, the required reduction ratio could be calculated by Equation (51).

$$i_{tot} = \frac{n_m}{n_w} \tag{51}$$

This turns out to be $i_{tot} = 17{,}93$. The required motor torque corresponding to the total reduction ratio is determined by Equation (52).

$$T_m = \frac{T_{out}}{i_{tot}} \tag{52}$$

This results in $T_m = 14{,}5\ N\ m$. The rated torque of the selected motor is 14,7 N m, which exceeds the required torque. Therefore, the motor operates within its continuous torque capability under the defined operating conditions. To convert the assumed rotational speed of the motor from rpm, n_m, to rad/s, ω_m, the following Equation (53) is used:

$$\omega_m = \frac{2\pi \cdot n_m}{60} \tag{53}$$

The minimum mechanical power required, assuming perfect efficiency, for the motor shaft can then be defined as Equation (54).

$$P_{min} = T_s \cdot \omega_m \tag{54}$$

The numerical evaluation gives $P_{min} = 2{,}17\ kW$. The selected motor has a rated power of 2,2 kW, which satisfies the calculated requirement. The small power margin is considered acceptable for this application, since the motion is intermittent and the duty cycle is low.

Since the motor is equipped with an integrated brake, the braking torque must be sufficient to hold the platform at standstill. The required brake torque on the motor shaft is equal to the required motor torque during operation. As the rated motor torque exceeds the required torque, the standard brake option for this motor size is sufficient to hold the load under static conditions.

The results for Equation (41) – (54) are summarized in Table 13.

Table 13 – Results of Equation (41) .(42),(47)– (54)

Eq	Sign	Name	Value	Unit of measurement
41	v	Target platform velocity	0,668	m/s
42	F_T	Total required traction force	3,25	kN
47	T_w	Required torque per driven wheel	65,1	N m
48	T_s	Torque per shaft	129,9	N m
49	T_{out}	Torque required per platform	259,8	N m
50	n_w	Wheel rotational speed	79,78	rpm
51	i_{tot}	Required reduction rate	17,93	-
52	T_m	Required motor torque	14,5	N m
53	ω_m	Rotational speed of motor	149,75	Rad/s
54	P_{min}	Minimum mechanical power	2,17	kW

3.3.2.2. Gearbox

The gearbox selection is based on the output requirements obtained from the platform drive analysis and on the nominal motor data verified in the previous section. The input parameters used for gearbox dimensioning are summarized in Table 14.

Table 14 – Input data for gearbox calculations

Sign	Name	Value	Unit of measurement
i_{tot}	Required total reduction ratio	17,93	–
i_{ch}	Chosen chain reduction ratio	2	–
T_m	Required motor torque	14,5	N m

The gearbox reduction ratio is determined from the total required reduction and the selected chain reduction according to Equation (55).

$$i_g = \frac{i_{tot}}{i_{ch}} \tag{55}$$

Using the values in Table 14, the required reduction ratio becomes $i_g = 8{,}96$. This ratio ensures that the required torque is transmitted to each wheel in the time frame specified. Using the calculated required reduction ratio, i_g, can be calculated according to Equation (56).

$$T_g = T_m \cdot i_g \tag{56}$$

Which leads to a required gearbox output torque $T_g = 129{,}9\ N\ m$.

The gearbox selected for the platform drive is a helical gear unit, type MAS H55 2 HS IA 63, mounted directly to the motor via an IEC B5 adapter [7]. This unit provides the required reduction ratio, torque capacity and thermal performance for the defined operating conditions.

The selected gearbox ratio is 10,27, which is slightly more than the required ratio of 8,96 derived from the kinematic requirements. The deviation results in a slightly longer travel time, since the speed at the wheels will be reduced (circa 1s longer travel time). This is considered acceptable for the application.

The rated output torque of the gearbox is 270 N m, which exceeds the required output torque of 129,9 N m. Therefore, the gearbox operates within its rated torque capacity under the defined loading conditions.

The maximum permissible input speed of the gearbox is 3 100 rpm, which is well above the rated motor speed of 1500 rpm. The gearbox input speed therefore remains within the allowable range for all operating conditions.

The results for Equation (55) and (56) are summarized in Table 15.

Table 15 – Gearbox requirements derived from analysis

Eq	**Sign**	**Name**	**Value**	**Unit of measurement**
55	i_g	Required gearbox reduction ratio,	8,96	–
56	T_g	Required gearbox output torque,	129,9	N m

3.3.2.3. Sprockets and Chains

Two sprockets will be situated on the driving shaft in order to drive each load-bearing shaft with a chain, see Figure 28. Since the chosen reduction ratio for the chain, i_c, is 2 the sprockets connected to the driving shaft needs to be half the size of the sprockets on the load-bearing shafts. The chosen diameters for the smaller sprockets, D_s, and the larger sprockets, D_L, can be found in Table 16.

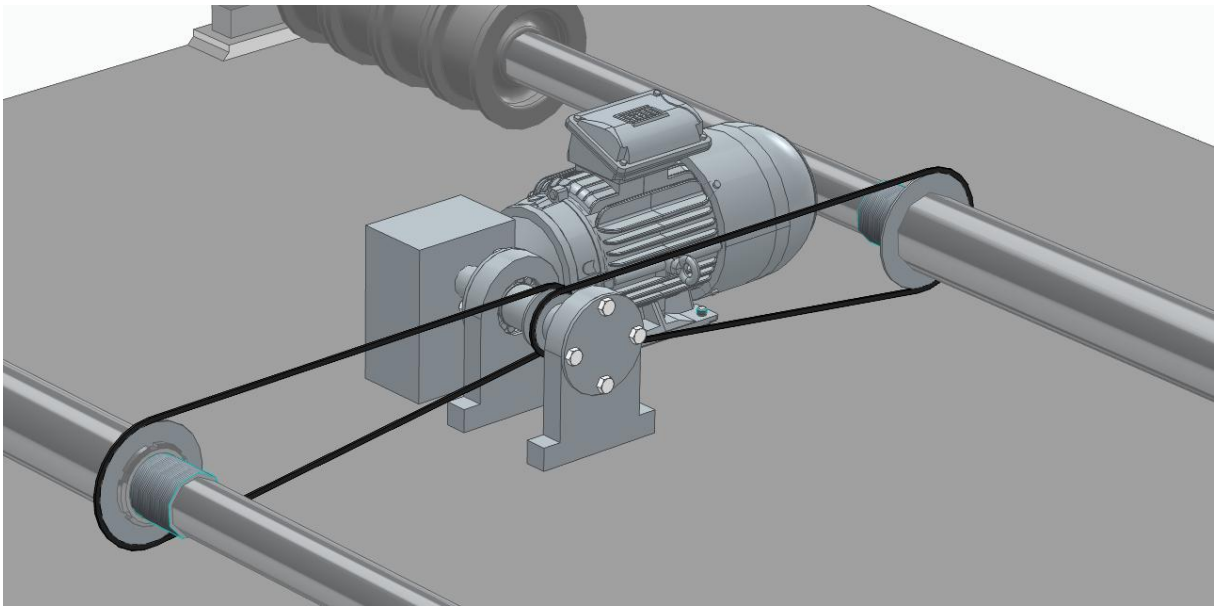

Figure 28 – Chains and sprockets connecting to the load-bearing shafts

Table 16 – Chosen diameter of the sprockets

D_s	75 mm
D_L	150 mm

3.3.2.4. Wheels

As previously determined the contact force between the platform wheels and the telescopic arms is 50,11 kN. The contact force being this large means that the wheels on the platform need to withstand a very heavy load. Because of this, industrial grade, see Figure 29, wheels with the ability to individually withstand a weight of 8 800 kg were chosen to be fitted to the platform. These wheels can be ordered with or without accompanying bearings (in our case, they are ordered without) and have a diameter of 160 mm and width of 75 mm [9].

Figure 29 – Chosen inudstrial wheel

3.3.2.5. Bearing selection and shaft design

In order to dimension the bearings for the load bearing shafts we first need to establish the forces acting on it. Figure 30 defines the geometry of the shaft.

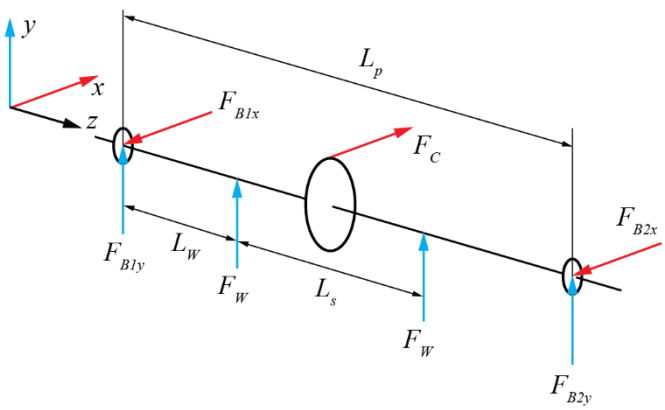

4Figure 30 – Free body diagram of the shaft for the wheels

Here F_C is defined by the outgoing torque from the gear box, T_s see Table 13, and the diameter of the larger sprocket, D_L, see Table 16, in accordance with Equation (57).

$$T_s = F_C \cdot D_L \tag{57}$$

Leading to (57) and the rest of the parameters of Figure 31 can be found in Table 17.

Table 17 – Known parameters for Figure 31

Sign	Name	Value	Unit of measurement
F_C	Chain force	1733,3	N
F_W	Force applied on the wheel, worst case (**Eq 19**)	50108	N
L_w	Distance between innermost wheel and bearing	432,5	mm
L_s	Distance between wheels	1560	mm
L_p	Distance between bearings	2425	mm

The relevant equilibrium equations for the yz-plane can be expressed in accordance with Equation (58) – (59).

$$\uparrow: F_{B1y} + 2 \cdot F_W + F_{B2y} = 0 \tag{58}$$

$$\circlearrowleft 1: F_W \cdot L_W + F_W \cdot (L_W + L_s) + F_{B2y} \cdot L_p = 0 \tag{59}$$

The relevant equilibrium equations for the xz-plane can be expressed in accordance with Equation (60) – (61).

$$\uparrow: F_C - F_{B1x} - F_{B2x} = 0 \tag{60}$$

$$\circlearrowleft 1: F_C \cdot \frac{L_p}{2} - F_{B2x} \cdot L_p = 0 \tag{61}$$

From Equation (60)-(61) the force acting on the bearings can be expressed as Equation (62).

$$F_{B2y} = F_W \; and \; F_{B2x} = \frac{F_C}{2} \tag{62}$$

And due to the symmetry of the shaft the other reaction forces can be modelled as Equation (63).

$$F_{B2y} = F_{B1y} = F_{By} \; and \; F_{B2x} = F_{B1x} = F_{Bx} \tag{63}$$

Where F_{By}= 50 108 N and F_{Bx} = 866,7 N. To summarize the radial load applied to the bearings Equation (64) is used.

$$F_{r1} = \sqrt{F_{By}^2 + F_{Bx}^2} \tag{64}$$

Resulting in the radial force experienced by each bearing being F_{r1} = 50115 N

The total forces acting on the shaft can be used to determine the maximum bending moment in the shaft to dimension it against yielding. The forces acting on the shaft are visualised in two shear force diagrams, one in the xz-plane and one in the yz-plane, Figures 31 and 32.

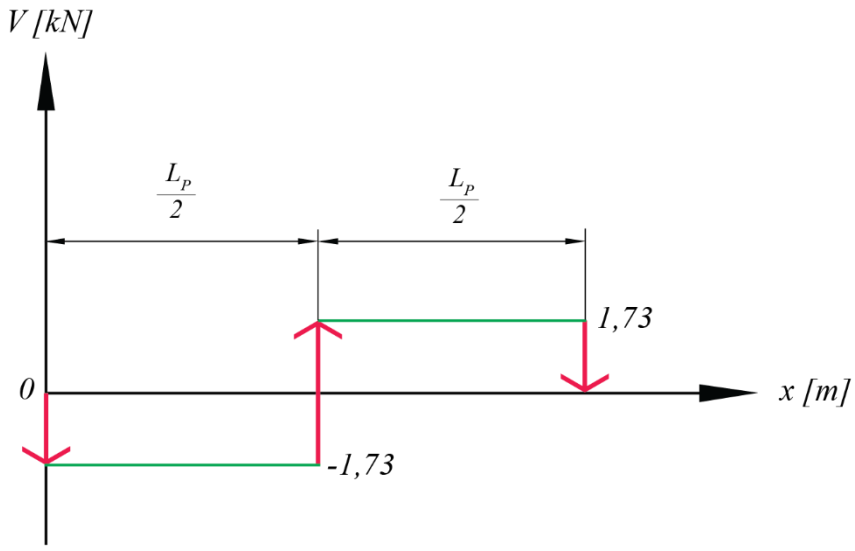

Figure 31 – Load-bearing shafts shear force diagram in xz-plane

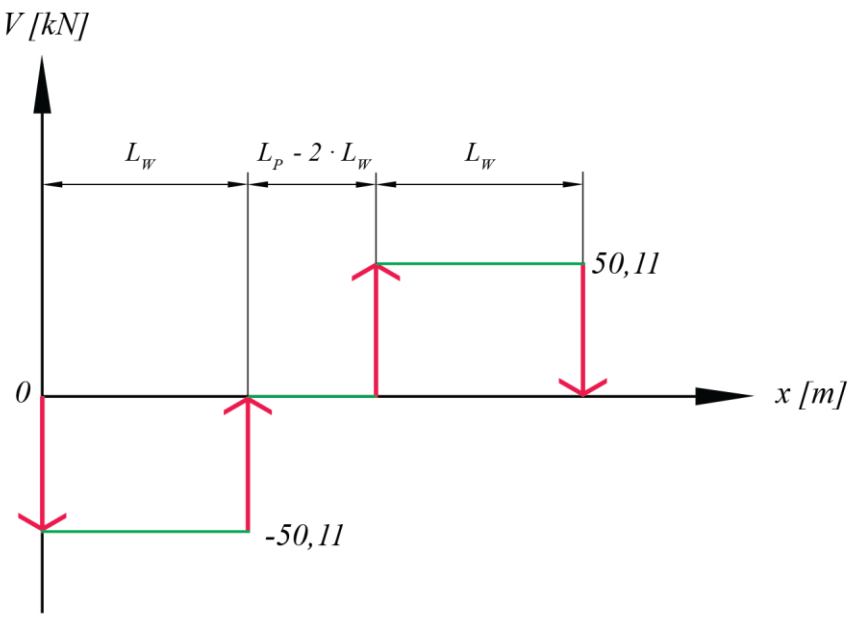

Figure 32 – Load-bearing shafts shear force diagram in yz-plane

The max bending moment, M is computed, through MATLAB, see Appendix 4, to be max at the distance from the bearing to the innermost wheel L_w where the moment is determined to be $M = 22\ 420\ Nm$.

Given the previously chosen wheels have a maximum bore diameter of 50 mm, and the exceedingly large bending moment a very high-performance steel with exceptional properties is chosen: maraging 300 steel [9]. For this size of diameter, it has a yield strength of at minimum, S_y = 1862 MPa. Using these values we can compute the resultant safety factor η, through von Mises equivalent stress (and the previously derived torque in the shaft).

$$\eta = \frac{\pi S_y d^3}{32\sqrt{(M^2 + 3T^2)}} \tag{65}$$

This results in a safety factor of η = 1,02. For a safety factor this is unreasonably low. To maintain a notable safety factor, it is more reasonable to encroach on the maximum bore diameter of the chosen wheels since they are rated for 8 800 kg loads (86,33 kN) with a safety factor already accounted for and the actual load is 50,11 kN. Using a 60 mm shaft diameter instead allows for a safety factor η = 1,76, which is still low however with proper maintenance and thorough analysis can be deemed acceptable.

Due to their ability to take high radial loads, and since the wheel manufacturers recommended them, spherical roller bearings were chosen. The summarized input data for the bearing calculations can be found in Table 18. Furthermore, the load was modelled as static due to the low level of revolutions required for one extension. Therefore, the equivalent static bearing load, P_0, can be calculated according to Equation (66).

Table 18 – Input data for bearing selection for the load bearing shaft

Radial load applied to the bearing, F_{r1}	50115 N
Axial load applied to the bearing, F_{a1}	0 N

$$P_0 = F_{r1} + Y_0 F_{a1} \tag{66}$$

Further the relation between the equivalent static bearing load, P_0, basic static load rating of the bearing, C_0, and the static safety factor, s_0, is expressed in Equation (67).

$$s_0 = \frac{C_0}{P_0} \tag{67}$$

Since the axial load on the bearing, F_{a1}, is 0 N the required basic static load rating of the bearing can be calculated according to Equation (68).

$$C_0 \geq F_{r1} \cdot s_0 \tag{68}$$

Using SKFs guidelines for the static safety factor, s_0, was set to 3. Leading to a required basic static load rating of $C_0 \geq$150 kN.

This in combination with the shafts diameter of 60 mm led us to choosing spherical bearing SKF 22212 E [10]. The arrangement of these two follows SKFs recommendation, see Figure 33. Here, *s*, is chosen to be 0,3 mm, since no large thermal expansion is expected. This means that each bearing is floating in one (opposite) direction and locating in the other.

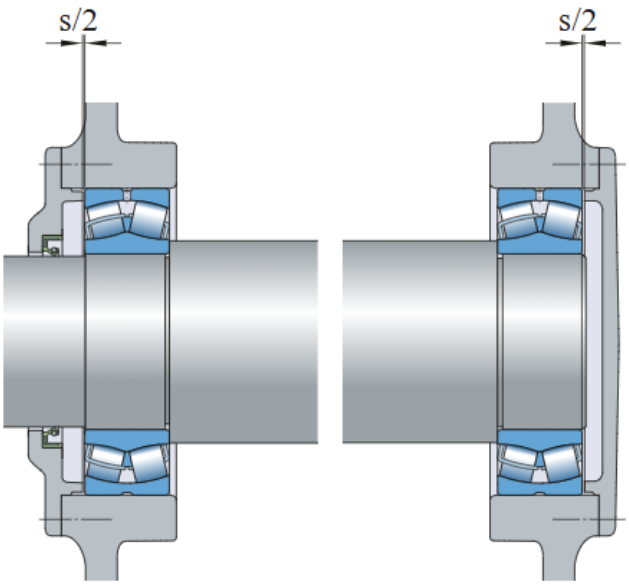

Figure 33 – Recommended bearing arrangement, s = 0,3 mm.

The abutment seen in Figure 33 is created by using a distancer with diameter 69 mm (following SKFs recommendations)[10]. The length of the distancer is decided by the distance between the bearing and nearest wheel: 53,5 mm.

To verify that the selected bearing had a reasonable lifetime, the equivalent dynamic bearing load was calculated using Equation (69).

$$P = F_{r1} + Y_1 F_{a1} \tag{69}$$

The basic rating life, L_{10}, can be calculated with the input data from Table 19 according to Equation (70).

Table 19 – Relevant input data for further calculations, for SKF 22212 E

Basic dynamic load rating, C	159 kN
Exponent for roller bearings, *p*	10/3

$$L_{10} = \left(\frac{C}{P}\right)^p \tag{70}$$

Yet again, due to the lack of axial loads, the equation of the basic rating life can be expressed according to Equation (71).

$$L_{10} = \left(\frac{C}{F_{r1}}\right)^p \tag{71}$$

Using the input data from Table 19 and the applied radial load from Table 18 the basic rating life, L_{10}, can be found in Table 20 along with the other important results of the bearing selection process.

Table 20 – Summary of results from bearing selection of the load bearing shaft

Eq	Sign	Name	Value	Unit of measurement
64	F_{r1}	Radial load applied to the bearing	50115	N
65	η	Calculated safety factor	1,02	-
65	η	Calculated safety factor, increased bore diameter	1,76	-
66	P_0	Equivalent static bearing load	50115	N
68	C_0	Required basic static loading rating	≥150	kN
69	P	Equivalent dynamic bearing load	50115	N
71	L_{10}	Basic life rating	46,96	M of revolutions

To ensure that the bearings on the driving shaft would not limit the lifetime of the mechanism, the basic life rating of the load carrying shaft's bearings were used as a baseline. Since the chain has a ratio of 2:1 the driving shaft spins twice as much, and such requires a doubled basic life rating to match. Furthermore, the forces applied to the driving shaft needs to be studied. The geometry of the driving shaft is presented in Figure 34, with the given parameters in Table 21.

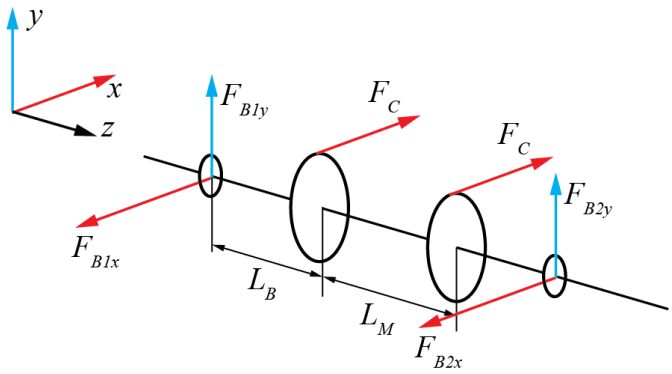

Figure 34 – Free body diagram of the driving shaft

Table 21 – Given parameters for Figure 34

Sign	Name	Value	Unit of measurement
F_C	Chain force	1733,3	N
L_B	Distance between bearing and sprocket	40	mm
L_M	Distance between sprockets	19,035	mm

Since there are no other forces in the yz-plane both bearings reaction force is equal to 0 N. The equilibrium equations for the xz-plane can be expressed in accordance with Equations (72)-(73).

$$\uparrow: -F_{B1x} + 2 \cdot F_C - F_{B2x} = 0 \tag{72}$$

$$\circlearrowleft 1: F_C \cdot L_B + F_C(L_B + L_M) - F_B \cdot L_{tot} = 0 \tag{73}$$

Where L_{tot} is defined according to Equation (74).

$$L_{tot} = 2 \cdot L_B + L_M \tag{74}$$

Using Equations (72)-(74) in combination with the fact that the shaft is symmetrical the force acting on the bearings can be defined according to Equation (75).

$$F_{B1x} = F_C = F_{B2x} \tag{75}$$

And since there are only forces in the xz-plane the radial load applied to the bearings can be defined in accordance with Equation (76).

$$F_{r2} = F_C \tag{76}$$

Meaning that the radial load applied to the bearings of the driving shaft is F_{r2} = 1733,3 N.

The bearing chosen arrangement consists of a locating deep groove ball bearing and a non-locating cylindrical roller bearing, see Figure 35.

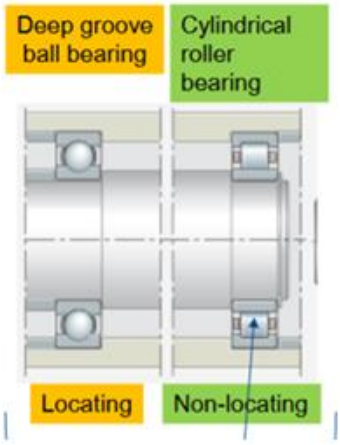

Figure 35 – Selected bearing arrangement for the driving shaft

Therefore, the calculations will vary due to a change in the exponent of the basic life rating calculation. Since that is dependent on bearing type. For all the input data see Table 22.

Table 22 – Input data for bearing selection for the driving shaft

Required basic life rating, $L_{10.D}$	93,9 M of Revolutions
Radial load applied to the bearing, F_{r2}	1733,3 N
Axial load applied to the bearing, F_{a2}	0 N
Exponent for ball bearings, p	3
Exponent for roller bearings, p	10/3

Equation (68) and (71) were used once more to calculate the required basic dynamic rating for both the bearing types. Yet again the axial load is 0 N and so results in Equation (77).

$$C = \sqrt[p]{F_{r2} \cdot L_{10,D}} \tag{77}$$

Expressing F_{r2} in kN and using the different values for the exponent, p, the results can be found in Table 23.

Table 23 – Required basic dynamic load rating for driving shafts bearing

Ball bearing	C	≥ 4,34 kN	Roller bearing	C	≥ 3,74 kN

In turn this leads to the choice of the ball bearing SKF 61908 and roller bearing SKF N 208 ECP [11], [12].

A summary of the important results for the bearing selection for the driving shafts bearings can be found in Table 24.

Table 24 – Summary of results from bearing selection of the load bearing shaft

Eq	**Sign**	**Name**	**Value**	**Unit of measurement**
-	F_{r2}	Radial load applied to the bearing	1733,3	N
69	P	Equivalent dynamic bearing load	50115	N
77	C	Ball bearings required basic dynamic loading rating	≥ 5,46	kN
77	C	Roller bearings required basic dynamic loading rating	≥ 4,61	kN

3.3.2.6. Keys

To connect the wheels to the shaft, keys were chosen to be used. The keys are dimensioned in accordance with Figure 36. Furthermore Table 25 presents the relevant parameters from the figure. The height, *H*, and width, *W*, of the key were derived from the shafts minimum required diameter, *D*, using the SMS 2305 key standard [13]. The material of the key needs to be weaker than the material, therefore an aluminium with a yield strength, S_y, of 190 MPa was chosen, Table 26 presents other relevant key dimensioning parameters.

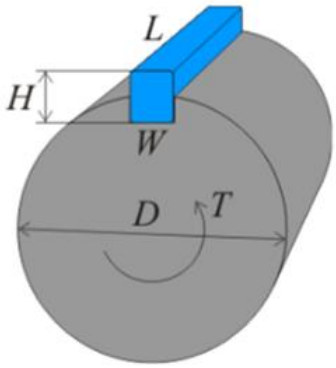

Figure 36 – Definition of key parameters

Table 25 – Key design parameters from Figure 25

Sign	Name	Value	Unit of measurement
T	Driving torque	129,9	N m
D	Diameter of shaft	60	mm
W	Width of key	14	mm
H	Height of key	9	mm

Table 26 – Other relevant key dimensioning parameters

S_y	Yield strength of key material	190	MPa
η_s	Standard key safety factor	3	-

With these parameters the minimum required key lengths were calculated with respect to shear, see (78), where L_τ is the minimum required length due to shear. And with respect to side pressure, see Equation (79), where L_p is the minimum required length due to side pressure.

$$L_\tau \geq \frac{4T\eta_s}{DWS_y} \tag{78}$$

$$L_p \geq \frac{4T\eta_s}{DHS_y} \tag{79}$$

The results of Equation (78) and (79) can be seen in Table 27. From these results we can see that the side pressure is the limiting factor. The actual key length was then chosen with SMS 2036 standard for key lengths; the chosen length can also be seen in Table 27 [14].

Table 27 – Minimum required and chosen key length

Equation 78	Equation 79	Chosen length
$L_\tau \geq 9.79$ mm	$L_p \geq 15.23$ mm	*L = 36 mm*

3.3.3. Vertical lift

The vertical lifts components consist of hydraulic cylinders, with corresponding pump and motor, and the screw jack, with corresponding motor and reductor.

3.3.3.1. Hydraulic cylinders

The maximum occurring extracting forces are $F_{Cyl} = 90{,}45\ kN$. We assume that the operating pressure of the system P is 200 bar, referencing to ISO 4413:2010 [2]. By knowing the operating pressure P and the minimum required load F_{Cyl}, we can calculate the minimum required piston area A_P with Equation (80).

$$P = \frac{F_{Cyl}}{A_P} \tag{80}$$

This results A_P = 45,225 cm^2.

The chosen hydraulics cylinders are double-acting, mill type from the CGH1 series from Bosch Rexroth, and the cylinders characteristics are summarized in Table 28 [15].

Table 28 – Cylinders characteristics

Name	Value	Unit of measurement
Cylinder bore diameter	80	mm
Cylinder rod diameter	45	mm
Stroke maximum velocity	0,18	m/s
Piston area	50,26	cm^2
Max extension force	125,65	kN
Stroke length	700	mm

3.3.3.2. Pump & motor

For supplying the hydraulic cylinders, we had to determine the maximum required pump flow Q with Equation (81).

$$v_{max} = \frac{Q}{A} \tag{81}$$

This results Q = 54,28 L/min for every cylinder. As we use one pump per train, it must supply 4 cylinders at the same time:

$$Q_{Total} = Q \cdot 4 \tag{82}$$

That means that our Q_{Total} ~ 218 L/min.

The chosen pump is the internal gear pump PGH5-3X/100LR11VU2, size 80 by Bosch Rexroth [16]. It is maximum flow capacity $Q_{max} = 240$ L/min safely exceeds the total required system flow. The maximum drive power of it is 103 kW.

Therefore, to drive the hydraulic pump, a WEG W22 Motor, 2 poles (3000 rpm), 50 Hz, with TEFC (IC411) cooling was selected [17]. The selected 110 kW motor exceeds the required pump power; therefore, the hydraulic flow is limited to the required value using a control valve.

The results for Equation (81) and (82) are summarized in Table 29.

2Table 29 – Results of Equations (81) and (82)

Eq	Sign	Name	Value	Unit of measurement
80	A_P	Minimum required piston area	45,225	cm^2
81	Q	Flow per cylinder	54,28	L/min
82	Q_T	Total flow rate	218	L/min

3.3.3.3. Screw jack

A four-jack lifting system in H-configuration is specified using Power Jacks E-Series, machine screw, translating, model EMT0100 (100 kN) [18]. The selected screw jack product code is:

EMT0100-UEW1100-0305-TB0B-00M0

All four screw jacks are identical and mechanically linked to ensure synchronous lift (H-system).

Table 30 – Numerical input data for screw jack sizing

Symbol	Description	Value	Unit
n_{jacks}	Number of screw jacks	4	–
s	Required stroke	305	mm
n_{worm}	Worm-shaft input speed (given by system drive)	360	rpm
η_{sys}	System efficiency with 4 screw jacks	0,85	–
η_{dyn}	Dynamic efficiency of the screw jack	0,258	–

The manufacturer defines the product code groups and character positions as shown in the “Screw Jack Product Code” tables [18].

Table 31 – Product code definition and meaning (letter-by-letter)

Code segment	Meaning (manufacturer definition)
E	E-Series
M	Machine screw
T	Translating screw
0100	100 kN capacity
U	Upright gearbox type
E	Gearbox Feature 1: Anti-rotation (keyed) with secondary guide
W	Gearbox Feature 2: Safety nut (compression) with wear monitor (sensor)
1	Gear ratio: Option 1
1	Lifting screw lead: Option 1 (RH standard)
00	Worm shaft type & ends: standard material, both ends
0305	Stroke in mm
T	End type: Top plate
B	Gearbox mounting: Base mount
0	Lifting screw material: Standard
B	Cover: cover pipe + bellows boot
0	Drive type: none (no motor adapter)
0	Motor frame/interface: not applicable (since drive type = 0)
M	Limit switches: electro-mechanical, 2 end-of-stroke, adjustable
0	Paint/lubricant/seals: standard

From Equation (34) the load required by screw jack was determined F_{Screw} = 43,25 kN.

A 100 kN screw jack therefore operates at ~43% of rated capacity, providing margin for non-ideal load sharing; thus, EMT0100 is selected (E-Series, translating machine screw).

For the selected anti-rotation translating design, the manufacturer performance table for EMT0100 provides the available gear ratio options and lead options:

$$\text{Gear ratio Option 1: } i_{\text{worm}} = 8:1$$

$$\text{Gear ratio Option 2: } i_{\text{worm}} = 24:1$$

$$\text{Lead Option 1: } L = 12\ mm$$

$$\text{Lead Option 2: L} = 24\ \text{mm}$$

The linear travel per worm revolution according to the Equation (83) is.

$$p_{worm} = \frac{L}{i_{worm}} \tag{83}$$

With $L = 12\ mm$ and $i_{\text{worm}} = 8$, this gives $p_{\text{worm}} = 1{,}5$ mm/rev. This is consistent with the project clarification that 12 mm is per screw revolution, while 1,5 mm is per worm revolution.

The linear lifting speed according to the Equation (84) is.

$$v = \frac{n_{worm} \cdot p_{worm}}{60} \tag{84}$$

The lift speed becomes v = 0.009 m/s.

The stroke time can then be defined as Equation (85).

$$t = \frac{s}{v} \tag{85}$$

This gives the time $t = 33{,}9$ s.

The manufacturer states that efficiency depends on configuration; for anti-rotation with safety nut, the dynamic efficiency values apply, and the anti-rotation safety-nut unit uses the same performance basis.

From the manufacturer's anti-rotation performance data (model size 100 kN), the dynamic efficiencies are:

$$\eta_{\text{dyn}} = 0{,}258 \text{ for Gear ratio Option 1 + Lead Option 1}$$

$$\eta_{\text{dyn}} = 0{,}368 \text{ for Gear ratio Option 1 + Lead Option 2}$$

The project uses a system efficiency factor for a mechanically linked multi-jack arrangement, which according to the Equation (86) is.

$$\eta_{\text{total}} = \eta_{\text{dyn}} \cdot \eta_{\text{sys}} \tag{86}$$

Total mechanical power required is defined as the Equation (87).

$$P_{total} = \frac{4 \cdot F_{screw} \cdot v}{\eta_{total}} \tag{87}$$

Using F_{Screw}= 43, 25 kN from Equation (34) the Equation (87) yields a power total of $P_{\text{total}} \approx 7{,}10$ kW

The force for each screw can then be defined as Equation (88):

$$P_{\text{jack}} = \frac{P_{\text{total}}}{n_{jacks}} \tag{88}$$

Resulting in $P_{\text{jack}} \approx 1{,}78$ kW

Manufacturer constraint (per jack) for EMT0100 anti-rotation, the maximum allowable input power is:

$$P_{\text{max}} = 3{,}75 \text{ kW for Gear ratio Option 1}$$

$$P_{\text{max}} = 1{,}125 \text{ kW for Gear ratio Option 2}$$

Since $P_{\text{jack}} \approx 1{,}78$ kW is below 3,75 kW but above 1,125 kW, Gear ratio Option 1 is selected, and Option 2 is rejected on the manufacturer input-power limit.

Anti-rotation (keyed) and secondary guide (E): required because translating screws must not rotate; the manufacturer describes the keyed anti-rotation mechanism and its purpose for rotationally unconstrained loads.

Safety nut compression and wear monitor sensor (W): selected as a secondary load path and wear indication for critical lifting; manufacturer describes safety-nut function and the need to specify load direction (compression vs tension).

Bellows boot and cover pipe (B): selected for environmental protection (dust/contamination) per accessory options in the code table.

Electro-mechanical limit switches, 2 end-of-stroke (M): selected to prevent over-travel at both ends of the 305 strokes; definition per manufacturer code table.

Table 32 – Results of Equation (83)-(88)

Eq	Sign	Name	Value	Unit of measurement
83	p_{worm}	Linear travel per worm	1,5	mm rev^{-1}
85	t	Stroke time	33,9	s
87	P_{total}	Total mechanical power required	7,10	kW
88	P_{jack}	Mechanical power per jack	1,78	kW

3.3.3.3.1. Screw jack motor

A 3-phase AC induction brake motor, 4-pole, 50 Hz, rated speed ≈ 1440 rpm, rated power 7,5 kW, IEC frame 132. The brake is selected to provide fail-safe holding.

From Equation (87) the power required by the motor to move the 4 screw jacks is determined by: $P_{\text{total}} \approx 7{,}10$ kW.

Choosing the smallest standard motor rating such as Equation (89)

$$P_{rated} \geq P_T \tag{89}$$

With $P_T = 7{,}10$ kW, the next standard size is 7,5 kW, therefore:

$$7{,}5 \text{ kW} > 7{,}10 \text{ kW}$$

For a rotating machine, torque is defined as in Equation (90).

$$T = \frac{9550\,P}{n} \tag{90}$$

At $P = 7{,}09$ kW and $n = 1440$ rpm, gives $T_{\text{req}} \approx 47{,}0$ Nm

A standard 7,5 kW, 4-pole motor at 1440 rpm provides rated torque ≈ 50 Nm, satisfying $T_{\text{rated}} \geq T_{\text{req}}$ and $P_{\text{rated}} \geq P_{\text{s}}$.

As stipulated earlier in Table 30, the revolutions required for the extension of the screw jack are $n_{worm} = 360\ rpm$.

Assuming a reducer with a basic value of 4:1, we can obtain the revolutions that the motor must provide in Equation (91).

$$n_{motor} = n_{worm} \cdot i_{red} \tag{91}$$

The resulting value being $n_{motor} = 1440\ rpm$.

The 4-pole catalogue entry confirms 7,5 kW ~ 1440 rpm (IEC 132) is available and matches the assumed power and speed level used to meet the kinematic target.

Table 33 – Results of Equation (89)-91)

Eq	Sign	Name	Value	Unit of measurement
90	T_{req}	Motor torque required	47	N m
91	n_{motor}	Motor rotational speed	1440	rpm

3.3.3.3.2. Screw jack system reductor

An in-line helical reduction gearbox (Power Jacks C-series) is selected as the motor-to-system reducer [18]. The C-series is specified because its published operating envelope covers the required torque, power, and ratio range for screw-jack system building.

The chosen reducer can provide a reduction from 2,6:1 to 1481:1; the ratio needed to reach the required speed is 4:1, so this characteristic is met without problems.

The reducer, being the one that must provide the torque for the 4 screw jacks, must be capable of providing a torque, given by the Equation (92).

$$T_{total} = T_{req} \cdot n_{jacks} \tag{92}$$

Giving a value of $T_{\text{total}} \approx 188{,}0$ Nm

The proposed reducer handles torque values from 45 Nm to 12000 Nm, with the value of $T_{\text{total}} \approx 188{,}0$ Nm being within these limits.

For the power stipulated by the motor, which specifies a power of 7,5kW and a speed of 1440rpm, the reducer can support this power since it handles values from 0,08 kW to 213 kW (at 1400 rpm input).

Table 34 – Results of Equation (92)

Eq	Sign	Name	Value	Unit of measurement
92	T_{total}	Gearbox torque required	47	N m

4. Discussion

In this section, the main outcomes of the project are discussed with focus on what the calculations and design choices imply in practice. The discussion follows the structure of the final concept and highlights the most important limitations, mistakes and remaining uncertainties, as well as the work that would be required to turn this proposed concept into a more complete and reliable solution.

Since the project was conducted within a limited timeframe, not all the details could be developed to the same level. Therefore, this section also highlights the main gaps that should be addressed in a future work. The goal is to provide a clear overview of what is already presented in the present work and what must be evaluated further before this concept can be considered ready for prototyping.

4.1 Geometry and force analysis

The MATLAB models that were used for these analyses used initial guesses based on early CAD and some values have changed, e.g. the assumed mass of the beams being around 60 kg, the final beams have a weight around about 75 kg. Ideally the final design of the beams would have been iterated to minimize the weight while simultaneously updating the CAD models to see how larger weight impacts requirements and calculations.

An example of this is the deflection when the arms are fully extended but still unsupported. It is unknown if the estimated deflection 5,09 mm will be enhanced or decreased since both the weight and cross section has changed in the final version. If the deflection is significantly larger, it might impact the location of other components like the screw jack. Future work here should be done to carry out a FEM analysis on the final version of the beams to see how the different load and cross section would behave.

Another glaring example is the calculated contact force between a wheel and the track. It was calculated to be 50,11 kN based on the weight of cargo and an assumption on the weight of the platform. The issue is that the final weight of the platform depends on calculations made with this estimate (for example weight of shaft, wheels etc.). Using the actual final weight (630 kg) produces the contact force 50,43 kN. While this is a relatively small difference, subsequent calculations should ideally have been iterated.

Whether the requirements on hardness are fulfilled are somewhat unclear, the steel that is chosen for the telescopic beams is discussed below in the discussion of the FEM analysis, the chosen steel is: S700MC [19]. The hardness of this steel seems to depend on manufacturer and is not standardised, however with instructions on treatment a hardness value should be able to be ascertained. According to [20], this steel will have a Brinell hardness of $HB \approx 255$. Since Vickers hardness values usually exceed Brinell hardness the hardness of the chosen steel should certainly reach the minimum required value of $HV = 166{,}1$, and probably also reach the recommended value of $HV = 276{,}9$ (at the very least the hardness will have a sizeable safety factor).

4.2 FEM

One of the main limiting factors in the FEM analysis was the inability to create a finer mesh to obtain a convergence, particularly in the analysis of the platform where the program could not solve the model with a finer mesh. The use of symmetry could have alleviated this issue, however despite repeated attempts the modelling of the symmetrical piece did not work, hence the analysis hade to be completed with the entire model. Regardless the deflections and stresses discovered on the platform analyses are insignificant enough to ignore the lack of a convergence (error less than 1%).

Unfortunately, the lack of convergence for the analysis on the beam is a different story. Here results a few iterations apart from each other give as far apart values as 340 MPa and 300 MPa, certainly not insignificant. The lack of convergence might be due to the way mesh sizes were varied, i.e. selecting one element size for most of the beam, and only selecting the fine mesh on the face of the contact. Since

the maximum stress was found below the surface it would in a future iteration be recommended to create a fine mesh for the entire segment (to make sure the inside of the model has a fine mesh at the most critical point).

Regarding the value of stress itself, being as large as it was means that a very high-grade steel would have to be chosen to fulfil the safety factor obtained through Pugsley's safety factor approach: 2,76. If instead a safety factor of 2 is allowed a less exotic steel can be chosen, partially cutting down costs (of course a lower safety factor entails more maintenance required).

As previously stated, the steel chosen for this task is S700MC [19] which, with a yield strength of 700 MPa practically ensures a safety factor of 2.

4.3 Chosen components

The choice to use sintered leaded bronze and lubricating it frequently, to circumvent the maximum allowed *pv-value*, is a bit of a risk and needs to be further evaluated. Firstly, it would be beneficial to control how much the lifetime of the blocks would be impacted. Since one of the main goals of this project is to produce a more effective solution to loading and unloading cargo, it would be detrimental if the blocks would require frequent maintenance to exchange the blocks. Secondly, how often excess lube would need to be applied must be evaluated. If reapplication is infrequent enough the design, could work as is. But if lubrication is required constantly, the telescopic arms would have to be redesigned in order to fit some sort of lubrication supply for each block. Possible improvements that could alleviate the issue is to allow for a slower extension speed or increase the area of the blocks (this would however give rise to higher contact forces since the lever arm to the center of the contact would be made smaller). Another option is to add a fifth telescopic arm to allow for a greater overlap and hence lessen the contact forces.

Another component worth discussing is the motor. The minimum required output power of the motor, 2,17 kW, is very close to the rated output of the motor, 2,2 kW. The argument for the motor is the low duty-cycle and intermittent motion. However, the equations used to dimension the motor do not consider possible losses, except for slip. Losses from the gearbox and chains have not been considered. Therefore, another slightly heavier motor could have been chosen in order to account for the lack of losses in the calculations.

The chosen gearbox is also over dimensioned. This is due to a calculation mistake that was found and corrected towards the end of the project. Given more time another, more suitable, gearbox should have been selected.

Furthermore, the chains and sprockets used to drive the platform need to be evaluated. Due to a lack of time no calculations were carried out to verify that the dimensions would work. Further work would therefore be required to verify their function. In addition, it would have been beneficial to compare different solutions such as belt transmission to weigh up pros and cons. This would have provided a more informed background to choose the most optimal solution.

When the design of the load-bearing shaft was conducted multiple issues were revealed. Due to the way the shaft was modelled in the initial phases the project, with bearings located at the ends, the stress experienced in the shafts were too high. To avoid having to compromise the safety factor and changing the material of the shaft it could have been redesigned. For example, situating the bearings closer to the middle of the platform could have alleviated the bending. Another solution could have been dividing the shafts in two and therefore minimizing the leverage.

Another issue that arises from the modification of shaft parameters is the fact that chosen wheels function must be compromised. Since the wheels have a maximum allowed bore diameter of 50 mm,

the manufacturer does not guarantee that the wheels will retain the same properties. Therefore, further analysis would be required to ensure that the chosen wheels can carry the required load.

Further work would also be required to ensure that the pump and motor selected for the hydraulics, of both the horizontal and vertical system, can be connected. The chosen pumps do require a coupling, and possibly a shaft, in order to be driven by the selected motors. Furthermore, a more in-depth analysis would be needed to ensure that tubing can be run to the hydraulic cylinders when the arms are extended. Figure 37 shows the proposed way of connecting the tubes. The same type of analysis would be required for how to lead the electricity to the platform. The current proposed idea, a cable carrier, can be seen in Figure 38 along with its corresponding CAD placeholder.

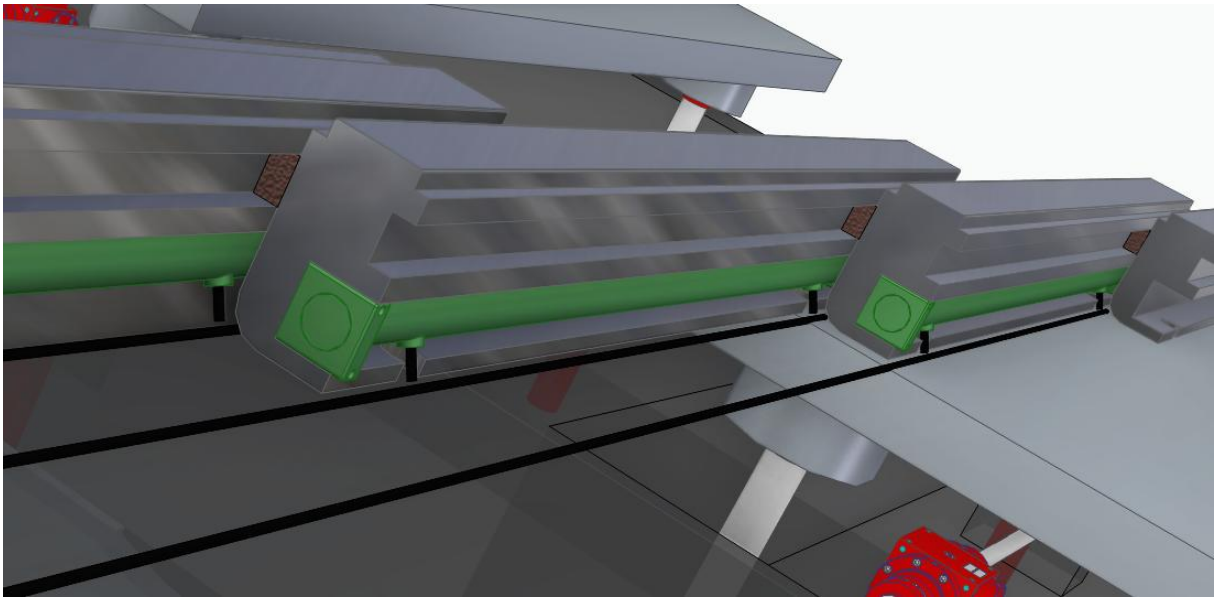

Figure 37 – Proposed tubing solution

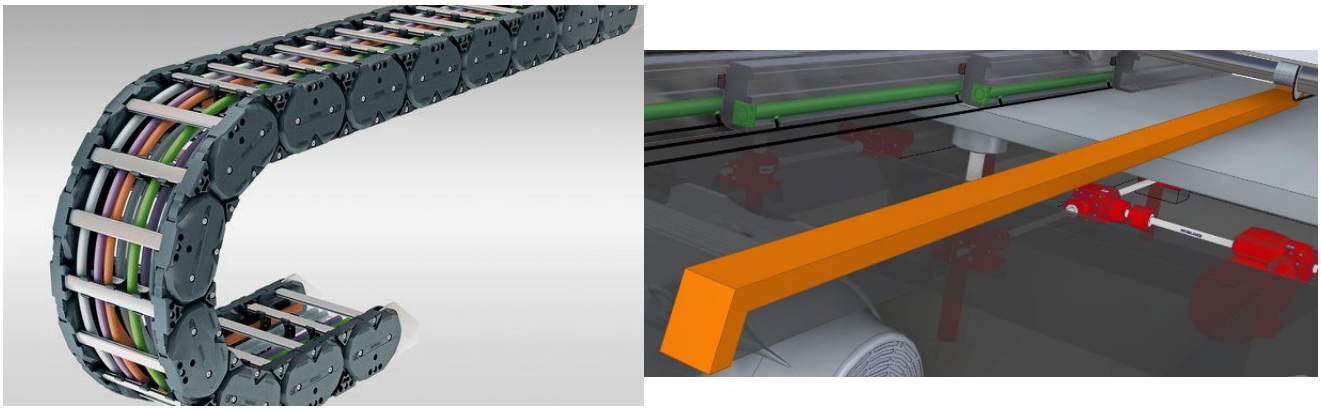

Figure 38 – Cable carrier alongside CAD placeholder

All in all, designing is an iterative process, and this project would greatly benefit from increased iteration and optimisation in most subsystems, since small design tweaks could enhance the performance and help alleviate some of the current design's shortcomings. With these iterations and optimisations as future work, the task of moving on to prototyping could start.

5. References

[1] '3 Principles of packing - Transport - CTU Code - UNECE Wiki'. Accessed: Dec. 14, 2025. [Online]. Available: https://wiki.unece.org/spaces/TransportSustainableCTUCode/pages/23102046/3+Principles+of+packing

[2] 'Standard - Hydraulic fluid power - General rules and safety requirements for systems and their components (ISO 4413:2010) SS-EN ISO 4413:2010 - Swedish Institute for Standards, SIS', Svenska institutet för standarder, SIS. Accessed: Dec. 14, 2025. [Online]. Available: https://www.sis.se/en/produkter/environment-health-protection-safety/safety-of-machinery/sseniso441320102/

[3] 'INTERNAL GEAR PUMP R901260689 | R901260689 | Bosch Rexroth'. Accessed: Dec. 14, 2025. [Online]. Available: https://store.boschrexroth.com/en/hu/p/internal-gear-pump-r901260689

[4] 'W22 132 kW 2P 315S/M 3Ph 400/690 V 50 Hz IC411 - TEFC - B3T | W22 | Three Phase | Low Voltage IEC Motors | Electric Motors | WEG - Products'. Accessed: Dec. 14, 2025. [Online]. Available: https://www.weg.net/catalog/weg/SE/en/Electric-Motors/Low-Voltage-IEC-Motors/Three-Phase/W22-/W22-132-kW-2P-315S-M-3Ph-400-690-V-50-Hz-IC411---TEFC---B3T/p/17349513

[5] *Maskinelement Handbok*. Stockholm: Kungliga tekniska högskolan, Instutionen för maskinkonstruktion, 2008.

[6] 'W22 Brake Motor IE1 2.2 kW 4P 100L 3Ph 220-230-240/380-400-415//460 V 50 Hz IC411 - TEFC - B34T | W22 Brake Motors | Brake Motors | Special Application Motors | Electric Motors | WEG - Products', WEG. Accessed: Dec. 14, 2025. [Online]. Available: https://www.weg.net/catalog/weg/SE/en/Electric-Motors/Special-Application-Motors/Brake-Motors/W22-Brake-Motors/W22-Brake-Motor-IE1-2-2-kW-4P-100L-3Ph-220-230-240-380-400-415-460-V-50-Hz-IC411---TEFC---B34T/p/13577525

[7] 'Geared Motors | WEG - Products', WEG. Accessed: Dec. 14, 2025. [Online]. Available: https://www.weg.net/catalog/weg/AL/en/Gearboxes-and-Geared-Motors/MAS/Geared-Motors/c/GLOBAL_GEARBOXES_MAS_GEAREDMOTORS

[8] 'TITAN Wheel set KG 130 Series'. Accessed: Dec. 14, 2025. [Online]. Available: https://www.karl-georg.de/en/products-solutions/wheel-sets/titan-wheel-set-kg-130-series

[9] 'maraging-300-steel-bar.pdf'. Accessed: Dec. 14, 2025. [Online]. Available: https://www.smithsadvanced.com/assets/pdf/maraging-300-steel-bar.pdf

[10] '22212 E - Spherical roller bearings | SKF'. Accessed: Dec. 13, 2025. [Online]. Available: https://www.skf.com/my/products/rolling-bearings/roller-bearings/spherical-roller-bearings/productid-22212%20E

[11] '61908 - Deep groove ball bearings | SKF'. Accessed: Dec. 13, 2025. [Online]. Available: https://www.skf.com/my/products/rolling-bearings/ball-bearings/deep-groove-ball-bearings/productid-61908

[12] 'N 208 ECP - Cylindrical roller bearings | SKF'. Accessed: Dec. 13, 2025. [Online]. Available: https://www.skf.com/my/products/rolling-bearings/roller-bearings/cylindrical-roller-bearings/single-row-cylindrical-roller-bearings/productid-N%20208%20ECP

[13] 'Standard - Kilförband - Kilspår för plattkilar i cylindriska axlar och nav SMS 2305', Svenska institutet för standarder, SIS. Accessed: Dec. 13, 2025. [Online]. Available: https://www.sis.se/produkter/mekaniska-system-och-komponenter/axlar-och-axelkopplingar/kilar-och-kilspar-splines/sms2305/

[14] 'Standard - Kilförband - Plattkilar med runda ändar SMS 2306', Svenska institutet för standarder, SIS. Accessed: Dec. 13, 2025. [Online]. Available: https://www.sis.se/produkter/mekaniska-system-och-komponenter/axlar-och-axelkopplingar/kilar-och-kilspar-splines/sms2306/

[15] 'Media Details | Bosch Rexroth Germany'. Accessed: Dec. 14, 2025. [Online]. Available: https://www.boschrexroth.com/en/de/media-details/7ebcaa34-0216-4393-8091-850530916e83

[16] 'INTERNAL GEAR PUMP R901260688 | R901260688 | Bosch Rexroth'. Accessed: Dec. 14, 2025. [Online]. Available: https://store.boschrexroth.com/en/hu/p/internal-gear-pump-r901260688
[17] 'W22 110 kW 2P 315S/M 3Ph 400/690 V 50 Hz IC411 - TEFC - B3T | W22 | Three Phase | Low Voltage IEC Motors | Electric Motors | WEG - Products', WEG. Accessed: Dec. 14, 2025. [Online]. Available: https://www.weg.net/catalog/weg/SE/en/Electric-Motors/Low-Voltage-IEC-Motors/Three-Phase/W22-/W22-110-kW-2P-315S-M-3Ph-400-690-V-50-Hz-IC411---TEFC---B3T/p/17479646
[18] 'powerjacks-screw-jack-design-guide-pjdg-sj-en-04.pdf'. Accessed: Dec. 14, 2025. [Online]. Available: https://www.powerjacks.com/perch/resources/brochure/powerjacks-screw-jack-design-guide-pjdg-sj-en-04.pdf
[19] 'Strenx® 700MC D/E', SSAB. Accessed: Dec. 15, 2025. [Online]. Available: https://www.ssab.com/sv-se/varumarken-och-produkter/strenx/produktutbud/700/mc-d-e
[20] 'EN S700MC Cold Forming Steel - High Strength | MetalZenith', Metal Zenith. Accessed: Dec. 15, 2025. [Online]. Available: https://metalzenith.com/products/en-s700mc-cold-forming-steel
[19] 'Strenx® 700MC D/E', SSAB. Accessed: Dec. 15, 2025. [Online]. Available: https://www.ssab.com/sv-se/varumarken-och-produkter/strenx/produktutbud/700/mc-d-e
[20] 'EN S700MC Cold Forming Steel - High Strength | MetalZenith', Metal Zenith. Accessed: Dec. 15, 2025. [Online]. Available: https://metalzenith.com/products/en-s700mc-cold-forming-steel

Appendix 1: MATLAB code extension analysis, including function

```
%% SETUP
clear all, close all, clc

%% INPUT DATA
% Unchangable
g = 9.82;               % [m/s^2]

L_b = 1.4;              % [m] Length of each beam (maximum allowed in the Ant)
Stroke_length = 1.07;   % [m] Stroke length of pistons (If this is changed L_b has
to be changed to accomodate / extra beam added)

% Variable
    % Telescopic Beams
    L_o = (L_b - Stroke_length)/2;  % [m] Distance between edge of beam and center
of overlap (given 1.4m  beam length the maximum overlab is 0.33m)
    L1 = 0.12;                      % [m] Distance from center of overlap to
contact point between beams

    m1 = 62;    % [kg] Weight of Te1
    m2 = 60;    % [kg] -II- Te2
    m3 = 60;    % [kg] -II- Te3
    m4 = 58;    % [kg] -II- Te4

    % Piston & Time
    D = 0.04;           % [m] Bore diameter of cylinder
    Q = 3.9 * 10^-4;    % [m^3/s] Pump flow rate (Calculated from piston specs)

    A = pi * D^2 / 4;           % [m^2] Cylinder area
    v_max = Q / A;              % [m/s] % Maximum possible velocity
    t_acc = 0.3;                % [s] Time of acceleration (assumed)
    acc = v_max / t_acc;        % [m/s^2] Acceleration (and Retardation)
    x_acc = acc * t_acc^2 / 2;  % [m] Distance traveled during acceleration and
retardation
    x_const = Stroke_length - 2*x_acc;  % [m] Distance traveled during constanct
velocity
    t_const = x_const / v_max;  % [s] Time spent at constant velocity
    t = 2*t_acc + t_const;      % [m/s] Total Time

    u = 0.1;    % [] Friction coefficient

% Vectors
n = 100;    % Steps in vector

x1_vec = linspace(0,Stroke_length,n);   % [m] Distance from origo (edge of beam
Te1) to edge of beam Te2
x2_vec = 2*x1_vec;                      % [m] -II- from origo to edge of Te3
(Currently unused)
x3_vec = 3*x1_vec;                      % [m] -II- from origo to edge of Te4
(Currently unused)

t1_vec = zeros(1,n);           % Vector for time corresponding to position x (Done
for plotting calculated forces as a function of time)
for i = 1:n
    x = x1_vec(i);
    if x <= x_acc
        % Acceleration phase: x = 0.5*a*t^2 => t = sqrt(2*x/a)
```

```
        t_vec(i) = sqrt(2*x/acc);
    elseif x <= (x_acc + x_const)
        % Constant velocity phase: t = t_acc + (x - x_acc)/v_max
        t_vec(i) = t_acc + (x - x_acc)/v_max;
    else
        % Retardation phase (same as acceleration)
        x_ret = x - x_acc - x_const;  % Distance into retardation
        t_vec(i) = t_acc + t_const + sqrt(2*x_ret/acc);
    end
end

%% SYSTEM OF EQUATIONS

% Matrix Solver for Reaction and Contact Forces:
results_vec = zeros(n, 8);  % Create results_vec vector for storing calculated
reaction/contact forces
distance_vec = zeros(n, 4); % Create distance_vec to store distances (used in
equilibrium calculations)
for i = 1:n
    x1 = x1_vec(i);
    x2 = x2_vec(i); % (Currently unused)
    x3 = x3_vec(i); % (Currently unused)

    [R_A1, R_A2, Nte1, Nte2, Nte3, Nte4, Nte5, Nte6, r1, r1fix, r2, r2fix] =
Forces(g, m1, m2, m3, m4, x1, x2, x3, L_o, L1);

    results_vec(i,:) = [R_A1 R_A2 Nte1 Nte2 Nte3 Nte4 Nte5 Nte6];
    distance_vec (i,:) = [r1 r1fix r2 r2fix];
end

% Vectors of Calculated Forces:
R_A1_vec = results_vec(:,1);
R_A2_vec = results_vec(:,2);
Nte1_vec = results_vec(:,3);
Nte2_vec = results_vec(:,4);
Nte3_vec = results_vec(:,5);
Nte4_vec = results_vec(:,6);
Nte5_vec = results_vec(:,7);
Nte6_vec = results_vec(:,8);

% Friction Forces:
% Ff = μ*N
Ff1_vec = u*Nte1_vec;  % [N] Vector of all friction forces for every value of Nte1
(every position)
Ff2_vec = u*Nte2_vec;
Ff3_vec = u*Nte3_vec;
Ff4_vec = u*Nte4_vec;
Ff5_vec = u*Nte5_vec;
Ff6_vec = u*Nte6_vec;

% Required Piston Forces:
% ΣFx = 0 : FP1 - Ff1 - Ff2 = 0
FP1_vec = Ff1_vec + Ff2_vec;    % [N]
% ΣFx = 0 : FP2 - Ff3 - Ff4 = 0
FP2_vec = Ff3_vec + Ff4_vec;    % [N]
% ΣFx = 0 : FP3 - Ff4 - Ff5 = 0
FP3_vec = Ff5_vec +  Ff6_vec;   % [N]

%% Verification
```

```
% Verification of Results Through Equilibrium Equations (Telescope equations)
eq1_vec = zeros(1,n);
eq2_vec = zeros(1,n);
eq3_vec = zeros(1,n);
eq4_vec = zeros(1,n);
eq5_vec = zeros(1,n);
eq6_vec = zeros(1,n);
eq7_vec = zeros(1,n);
eq8_vec = zeros(1,n);

for i = 1:n
    R_A1 = R_A1_vec(i);
    R_A2 = R_A2_vec(i);
    Nte1 = Nte1_vec(i);
    Nte2 = Nte2_vec(i);
    Nte3 = Nte3_vec(i);
    Nte4 = Nte4_vec(i);
    Nte5 = Nte5_vec(i);
    Nte6 = Nte6_vec(i);

    r1 = distance_vec(i,1);     % Get the accurate distance to be used in
equilibrium equation
    r1fix = distance_vec(i,2);
    r2 = distance_vec(i,3);
    r2fix = distance_vec(i,4);

    r3 = r1;
    r3fix = r1fix;
    r4 = r2;
    r4fix = r2fix;
    r5 = r1;
    r5fix = r1fix;
    r6 = r2;
    r6fix = r2fix;

    % ΣMB = 0 : 0.7*R_A1 - 0.7*R_A2 + r1*Nte1 - r2*Nte2 = 0
    eq1_vec(i) = 0.7*R_A1 - 0.7*R_A2 + r1*Nte1 - r2*Nte2;
    % ΣFy = 0 : R_A1 + R_A2 + Nte1 - Nte2 - m1*g = 0
    eq2_vec(i) = R_A1 + R_A2 + Nte1 - Nte2 - m1*g;

    % ΣMB = 0 : -r1fix*Nte1 + r2fix*Nte2 + r3*Nte3 - r4*Nte4 = 0
    eq3_vec(i) = -r1fix*Nte1 + r2fix*Nte2 + r3*Nte3 - r4*Nte4;
    % ΣFy = 0 : -Nte1 + Nte2 + Nte3 -Nte4 - m2*g = 0
    eq4_vec(i) = -Nte1 + Nte2 + Nte3 -Nte4 - m2*g;

    % ΣMB = 0 : -r3fix*Nte3 + r4fix*Nte4 + r5*Nte5 - r6*Nte6 = 0
    eq5_vec(i) = -r3fix*Nte3 + r4fix*Nte4 + r5*Nte5 - r6*Nte6;
    % ΣFy = 0 : -Nte3 + Nte4 + Nte5 - Nte6 - m3*g = 0
    eq6_vec(i) = -Nte3 + Nte4 + Nte5 - Nte6 - m3*g;

    % ΣMB = 0 : -r5fix*Nte5 + r6fix*Nte6 = 0
    eq7_vec(i) = -r5fix*Nte5 + r6fix*Nte6;
    % ΣFy = 0 : -Nte5 + Nte6 - m4*g = 0
    eq8_vec(i) = -Nte5 + Nte6 - m4*g;
end

%% RESULTS

disp(['t = ' num2str(t,'%.1f') ' s'])
```

```
maxError_Force = max(abs([eq2_vec eq4_vec eq6_vec eq8_vec]));
maxError_Moment = max(abs([eq1_vec eq3_vec eq5_vec eq7_vec]));

disp(' ')
disp(['Max Error (Force equations) = ' num2str(maxError_Force)])
disp(['Max Error (Moment equations) = ' num2str(maxError_Moment)])

R_A1_max = max(abs(R_A1_vec));
R_A2_max = max(abs(R_A2_vec));
Nte1_max = max(abs(Nte1_vec));
Nte2_max = max(abs(Nte2_vec));
Nte3_max = max(abs(Nte3_vec));
Nte4_max = max(abs(Nte4_vec));
Nte5_max = max(abs(Nte5_vec));
Nte6_max = max(abs(Nte6_vec));

disp(' ')
disp(['Max R_A1 = ' num2str(R_A1_max/1000,'%.2f') ' kN'])
disp(['Max R_A2 = ' num2str(R_A2_max/1000,'%.2f') ' kN'])
disp(['Max Nte1 = ' num2str(Nte1_max/1000,'%.2f') ' kN'])
disp(['Max Nte2 = ' num2str(Nte2_max/1000,'%.2f') ' kN'])
disp(['Max Nte3 = ' num2str(Nte3_max/1000,'%.2f') ' kN'])
disp(['Max Nte4 = ' num2str(Nte4_max/1000,'%.2f') ' kN'])
disp(['Max Nte5 = ' num2str(Nte5_max/1000,'%.2f') ' kN'])
disp(['Max Nte6 = ' num2str(Nte6_max/1000,'%.2f') ' kN'])

FP1_max = max(abs(FP1_vec));
FP2_max = max(abs(FP2_vec));
FP3_max = max(abs(FP3_vec));

disp(' ')
disp(['Max FP1 = ' num2str(FP1_max/1000,'%.2f') ' kN'])
disp(['Max FP2 = ' num2str(FP2_max/1000,'%.2f') ' kN'])
disp(['Max FP3 = ' num2str(FP3_max/1000,'%.2f') ' kN'])

%% FIGURES AND ANIMATION

rTe2 = x1_vec;  % Geographical vector describing edge of Te2
rTe3 = x2_vec;  % -II- Te3
rTe4 = x3_vec;  % -II- Te4

for i = 1:n
    figure(1)
    % Beams
    plot([0 1.4],[0 0],'ko-','LineWidth',1) % Ritar linje mellan 0 och 1.4 m
(första teleskoparmen, Te1)
    hold on
    plot([rTe2(i) (rTe2(i) + 1.4)], [0 0],'ro-','LineWidth',1)  % Te2
    plot([rTe3(i) (rTe3(i) + 1.4)], [0 0],'bo-','LineWidth',1)  % Te3
    plot([rTe4(i) (rTe4(i) + 1.4)], [0 0],'go-','LineWidth',1)  % Te4

    %Forces
    arrow_scale = 1/1000; % Scale the arrows to be kN instead of N

    quiver(0, 0, 0, R_A1_vec(i)*arrow_scale, 0, 'Color', 'k', 'LineWidth',1);
% R_A1
    quiver(1.4, 0, 0, R_A2_vec(i)*arrow_scale, 0, 'Color', 'k', 'LineWidth',1);
% R_A2
```

```
    quiver((rTe2(i) + L_o - L1), 0, 0, Nte1_vec(i)*arrow_scale, 0, 'Color', 'r',
'LineWidth',1);    % Nte1
    quiver((rTe2(i) + L_o + L1), 0, 0, -Nte2_vec(i)*arrow_scale, 0, 'Color', 'r',
'LineWidth',1);   % Nte2
    quiver((rTe3(i) + L_o - L1), 0, 0, Nte3_vec(i)*arrow_scale, 0, 'Color', 'b',
'LineWidth',1);    % Nte3
    quiver((rTe3(i) + L_o + L1), 0, 0, -Nte4_vec(i)*arrow_scale, 0, 'Color', 'b',
'LineWidth',1);   % Nte4
    quiver((rTe4(i) + L_o - L1), 0, 0, Nte5_vec(i)*arrow_scale, 0, 'Color', 'g',
'LineWidth',1);    % Nte5
    quiver((rTe4(i) + L_o + L1), 0, 0, -Nte6_vec(i)*arrow_scale, 0, 'Color', 'g',
'LineWidth',1);   % Nte6

    grid on
    xlabel('x [m]','FontSize',14)
    ylabel('y [kN]','FontSize',14)
    title('Animation of Telescopic Arms')
    xlim([-0.25 4.8])
    ylim([-13 13])
    hold off
    pause(.01)
end

figure(2)   % Plot of Forces against time
subplot(2,2,1)
plot(t_vec, [R_A1_vec R_A2_vec]/1000,'LineWidth',1)
grid on
xlabel('Time [s]','FontSize',14)
ylabel('Force [kN]','FontSize',14)
legend('R_A1','R_A2')

subplot(2,2,2)
plot(t_vec, [Nte1_vec Nte2_vec]/1000,'LineWidth',1)
grid on
xlabel('Time [s]','FontSize',14)
ylabel('Force [kN]','FontSize',14)
legend('Nte1','Nte2')

subplot(2,2,3)
plot(t_vec, [Nte3_vec Nte4_vec]/1000,'LineWidth',1)
grid on
xlabel('Time [s]','FontSize',14)
ylabel('Force [kN]','FontSize',14)
legend('Nte3','Nte4')

subplot(2,2,4)
plot(t_vec, [Nte5_vec Nte6_vec]/1000,'LineWidth',1)
grid on
xlabel('Time [s]','FontSize',14)
ylabel('Force [kN]','FontSize',14)
legend('Nte5','Nte6')

%% Maximum deflection during extension (modeled as cantilever)

rcm = (1.77*m2 + 2.84*m3 + 3.91*m4)/(m2 + m3 + m4); % Distance to center of mass
(since beam 1 is directly on the ant it is not taken into account)
rcm_cb = rcm - 1.4; % Distance to center of mass in the modeled cantilever

F_cb = m2*g + m3*g + m4*g; % total force from weght in cantilever beam
```

```
E = 210*10^9;   % [Pa] E-modulus

b = 0.075;      % [m] Width of beam
h = 0.09;       % [m] Rough estimate on height of beam
I = b*h^3/12;   % Moment of inertia

Lcb = (4.61 - 1.4); % Length of cantilever beam
alpha = (Lcb - rcm_cb)/Lcb; % see KTH hållfasthetslära book of formulas
beta = 1-alpha;
xi = 0;

delta_max = F_cb*Lcb^3/(6*E*I) * (-beta^3+3*beta^2*(1-xi));

disp(' ')
disp(['Max deflection during extension = ' num2str(delta_max*1000,'%.2f') 'mm'])
```

External program for function (called upon in main script):

```
function [R_A1,R_A2,Nte1,Nte2,Nte3,Nte4,Nte5,Nte6,r1,r1fix,r2,r2fix] =
Forces(g,m1,m2,m3,m4,x1,x2,x3,L_o,L1)
A = zeros(8,8);     %Skapar en matris där A(ekv.nr. , variabelnr.) Denna används
för alla okända, VL
b_vec = zeros(8,1);  %Skapar vektor för alla kända, HL

r1 = (0.7 - x1 - L_o + L1); % Distance to Nte1 in Te1
r1fix = (0.7 - L_o + L1);   % Distance tp Nte1 in Te2 (fixed)

r2 = (0.7 - x1 - L_o - L1); % Distance to Nte2 in Te1
r2fix = (0.7 - L_o - L1);   % Distance tp Nte2 in Te2 (fixed)

% Assuming speed is equal for each cylinder, the beam Te3 will be as far
% along in Te2, as Te2 will be in Te1, etc. Therefore:
r3 = r1;
r3fix = r1fix;

r4 = r2;
r4fix = r2fix;

r5 = r1;
r5fix = r1fix;

r6 = r2;
r6fix = r2fix;

%% Vertical:
%% ---------- FBD Te1 ----------
    % ΣMB = 0 : 0.7*R_A1 - 0.7*R_A2 + r1*Nte1 - r2*Nte2 = 0
    A(1,1) = 0.7; A(1,2) = -0.7; A(1,3) = r1; A(1,4) = -r2;
    b_vec(1) = 0;

    % ΣFy = 0 : R_A1 + R_A2 + Nte1 - Nte2 - m1*g = 0
    A(2,1) = 1; A(2,2) = 1; A(2,3) = 1; A(2,4) = -1;
    b_vec(2) = m1*g;

%% ---------- FBD Te2 ----------
    % ΣMB = 0 : -r1fix*Nte1 + r2fix*Nte2 + r3*Nte3 - r4*Nte4 = 0
    A(3,3) = -r1fix; A(3,4) = r2fix; A(3,5) = r3; A(3,6) = -r4;
```

```
    b_vec(3) = 0;

    % ΣFy = 0 : -Nte1 + Nte2 + Nte3 -Nte4 - m2*g = 0
    A(4,3) = -1; A(4,4) = 1; A(4,5) = 1; A(4,6) = -1;
    b_vec(4) = m2*g;

%% ---------- FBD Te3 ----------
    % ΣMB = 0 : -r3fix*Nte3 + r4fix*Nte4 + r5*Nte5 - r6*Nte6 = 0
    A(5,5) = -r3fix; A(5,6) = r4fix; A(5,7) = r5; A(5,8) = -r6;
    b_vec(5) = 0;

    % ΣFy = 0 : -Nte3 + Nte4 + Nte5 - Nte6 - m3*g = 0
    A(6,5) = -1; A(6,6) = 1; A(6,7) = 1; A(6,8) = -1;
    b_vec(6) = m3*g;

%% ---------- FBD Te4 ----------
    % ΣMB = 0 : -r5fix*Nte5 + r6fix*Nte6 = 0
    A(7,7) = -r5fix; A(7,8) = r6fix;
    b_vec(7) = 0;

    % ΣFy = 0 : -Nte5 + Nte6 - m4*g = 0
    A(8,7) = -1; A(8,8) = 1;
    b_vec(8) = m4*g;

%% ---------- FBD Telescope ----------
%     % ΣMB = 0 : -1.4*R_A2 + 0.7*m1*g + (x1 + 0.7)*m2*g + (x2 + 0.7)*m3*g + (x3 +
0.7)*m4*g = 0
%     A(7,2) = 1.4;
%     b_vec(7) = 0.7*m1*g + (x1 + 0.7)*m2*g + (x2 + 0.7)*m3*g + (x3 + 0.7)*m4*g;
%
%     % ΣFy = 0 : R_A1 + R_A2 - g*(m1 + m2 + m3 + m4) = 0
%     A(8,1) = 1; A(8,2) = 1;
%     b_vec(8) = g*(m1 + m2 + m3 + m4);

% (Currently unused - Sytem becomes overdetermined)
%% SOLVE SYSTEM

x = A \ b_vec;

R_A1 = x(1);
R_A2 = x(2);
Nte1 = x(3);
Nte2 = x(4);
Nte3 = x(5);
Nte4 = x(6);
Nte5 = x(7);
Nte6 = x(8);

end
```

Appendix 2: MATLAB code for load analysis

```
%% SETUP
clear all, close all, clc

%% INPUT DATA
% Unchangable
g = 9.82;               % [m/s^2]

L_b = 1.4;              % [m] Length of each beam (maximum allowed in the Ant)
L_p = 1.3;              % [m] Length of wheelbase of platform (has to be smaller
than L_b)
L_beam = 0.5 + 0.2;     % [m] Length of free standing beam (fritt upplagd)
(distance between supports)

b = 0.075;      % [m] Width of beam

% Variable
    L_off = 2.44 * 0.05;    % [m] Distance from center of container to center of
mass of container
                            % (offset from center) Max is +-5% of width
    m_c = 30480;    % [kg] Weight of cargo
    m_p = 630;      % [kg] Weight of platform

    % Pugsley Safety Factor Approach
    ns1 = 2.3;      % A = g, B = f, C = f (See Pugsley Safety Factor Matrix for
Definition)
    ns2 = 1.2;      % D = ns, E = vs
    ns = ns1*ns2;   % [] Safety Factor

    E = 210*10^9;               % [Pa] E-modulus
    sigma = 310*10^6;           % [Pa] Yield Strength
    sigma_allowed = sigma/ns;   % [Pa] Maximum Allowed Stress

%% FBD

% FBD Container
% ΣFy = 0 : m_c*g - 2*N1 = 0
N1 = m_c*g/2;   % [N] Two platforms => 2*N1

    % Worst case scenario: load is offset by 5% in width AND length
    N1 = m_c*g*0.55; % (This just accounts for length... 5% in width is accounted
by with L_off)

% FBD Platform
% ΣMB = 0 : L_p/2*m_p*g + (L_p/2 + L_off)*N1 - L_p*2*N3 = 0
N3 = (L_p/2*m_p*g + (L_p/2 + L_off)*N1)/(L_p*2);    % [N] 2 Wheels => 2*N3

% ΣFy = 0 : 2*N2 + 2*N3 - N1 - m_p*g = 0
N2 = (N1 + m_p*g)/2 - N3;   % [N]

% FBD Beam
% Force acting in middle => RA = RT = N3/2
RA = N3/2;  % [N]
RT = N3/2;  % [N]

%% BEAM ANALYSIS

% Deflection in beam
```

```
h = 0.09;
I = b*h^3/12;   % Moment of inertia

delta_max = N3*L_beam^3/(48*E*I);   % [m]

% Maximum bending moment:
Mb = L_beam/2*RA;  % [Nm]

h = sqrt(6*Mb/(b*sigma_allowed));   % [m]

%% RESULTS

disp(['Max force in wheel = ' num2str(N3/1000,'%.2f') ' kN'])

disp(' ')
disp(['Safety factor = ' num2str(ns)])

disp(' ')
disp(['Min h = ' num2str(h*1000,'%.2f') ' mm'])

disp(' ')
disp(['Max deflection = ' num2str(delta_max*1000,'%.2f') ' mm'])

%% FIGURES

figure(1)
rectangle('Position',[0 0 1.4 0.2], 'EdgeColor','k', 'LineWidth',1);        %"The
Ant"
rectangle('Position',[0 0.2 1.4 0.2], 'EdgeColor','k', 'LineWidth',2);      %"Te1"
rectangle('Position',[1.07 0.2 1.4 0.2], 'EdgeColor','r', 'LineWidth',2);   %"Te2"
rectangle('Position',[2.14 0.2 1.4 0.2], 'EdgeColor','b', 'LineWidth',2);   %"Te3"
rectangle('Position',[3.21 0.2 1.4 0.2], 'EdgeColor','g', 'LineWidth',2);   %"Te4"
rectangle('Position',[1.9 0 2.9 0.1], 'EdgeColor','k', 'LineWidth',1);
%"Train"
rectangle('Position',[2.1 0.1 2.5 0.1], 'EdgeColor','k', 'LineWidth',2);
%"Support from train"
hold on

arrow_scale = 1/50000; % Scale the arrow (does not represent any unit)
quiver(1.75, 0.4 + N3*arrow_scale, 0, -N3*arrow_scale, 0, 'Color', 'r',
'LineWidth',2);

grid on
title('System under load')
xlim([0 4.8])
ylim([0 2])
xlabel('x [m]','FontSize',14)
ylabel('y [m]','FontSize',14)
```

Appendix 3. MATLAB for platform motion

```
clc; clear; close all;

%% INPUTS

m_T      = 30480*0.55 + 630;     % [kg] total mass (platform + load)
Crr      = 0.002;     % [-] rolling resistance coefficient (steel wheel on rail)
theta    = 0;         % [rad] slope angle (0 = perfectly horizontal)
g        = 9.81;      % [m/s^2] gravity

d        = 4.01;        % [m] distance that must be traveled
t_travel = 10;       % [s] total time allowed to travel distance d (average
motion)
t_accel  = 4;        % [s] time to ramp from 0 to final speed v

r_wheel  = 0.16/2;    % [m] driving wheel radius

%% FORCE CALCULATIONS

% Final speed based on distance and travel time
v_target = d / (t_travel - 2*0.5 * t_accel);   % [m/s] (assume acceleration and
retaradation is uniform)

% Acceleration based on ramp time to reach v_target
a = v_target / t_accel;    % [m/s^2]

% 1) Rolling resistance force
F_rod = Crr * m_T * g;          % [N]

% 2) Force due to slope (if theta = 0 this will be ~0)
F_pend = m_T * g * sin(theta);  % [N]

% 3) Force needed for linear acceleration
F_acel = m_T * a;               % [N]

% 4) Total required force at the wheel
F_T = F_rod + F_pend + F_acel;  % [N]

%% TORQUE AND POWER AT THE WHEEL

% Torque required at the driving wheel
T_wheel = F_T * r_wheel / 4;    % [N·m] (4 driven wheels)
T_shaft = 2* T_wheel;           % [N·m] (2 driven shafts)
T_total_output = 2 * T_shaft;   % [N·m] both shafts driven

% Wheel speed (useful later when you think about the gearbox)
n_wheel = (60 * v_target) / (2 * pi * r_wheel);   % [rpm]

%% OUTPUT

fprintf('Platform drive quick calculation\n\n');
fprintf('Mass experienced by platform: %.0f kg\n', m_T);
fprintf('Rolling coeff. (Crr)    : %.3f\n', Crr);
fprintf('Slope angle (theta)     : %.1f rad\n\n', theta);

fprintf('Distance (d)            : %.2f m\n', d);
fprintf('Travel time (t_travel)  : %.2f s\n', t_travel);
fprintf('Accel time (t_accel)    : %.2f s\n\n', t_accel);
```

```
fprintf('Max speed (v)           : %.4f m/s\n', v_target);
fprintf('Acceleration (a)        : %.4f m/s^2\n\n', a);

fprintf('F_rod (rolling)         : %.2f N\n', F_rod);
fprintf('F_pend (slope)          : %.2f N\n', F_pend);
fprintf('F_acel (accel)          : %.2f N\n', F_acel);
fprintf('F_T (total force)       : %.2f N\n\n', F_T);

fprintf('T_wheel (required)      : %.2f N·m\n', T_wheel);
fprintf('T_shaft (required)      : %.2f N·m\n', T_shaft);
fprintf('Wheel speed             : %.2f rpm\n\n', n_wheel);
%% MOTOR, GEARBOX & BRAKE REQUIREMENTS

% Assumptions
n_motor = 1430;        % rpm, 4-pole induction motor @ 50 Hz (1500 with slip)
chain_ratio = 2.0;     % 2:1 reduction (shaft rpm = motor rpm / 2)

% Required total reduction
total_ratio = n_motor / n_wheel;

% Gearbox ratio needed
G = total_ratio / chain_ratio;

% Motor torque needed (back-calculated through chain + gearbox)
T_total_output = 2 * T_shaft;           % total torque at gearbox and
chain/sprocket output (both shafts)
T_motor = T_total_output / (G * chain_ratio);   % motor torque (Nm)

% Motor angular speed
omega_motor = 2*pi*(n_motor/60);  % rad/s

% Required brake torque (brake is on motor side)
T_brake = T_motor;     % brake holds motor shaft → same torque

% Motor power required (mechanical)
P_min = T_motor * omega_motor;  % [W]
P_min_kW = P_min / 1000;        % [kW]
P_min_HP = P_min_kW / 0.746;    % [HP] (1 HP ≈ 0.746 kW)

%% OUTPUT MOTOR
fprintf("MOTOR & GEARBOX REQUIREMENTS\n\n");
fprintf("Total reduction required:   %.2f : 1\n", total_ratio);
fprintf("Chosen chain reduction:     %.2f : 1\n", chain_ratio);
fprintf("Required gearbox ratio:     %.2f : 1\n", G);
fprintf("Motor torque required:      %.2f N·m\n", T_motor);
fprintf("Required brake torque:      %.2f N·m\n", T_brake);
fprintf('P_min: %.2f W  (%.3f kW, %.3f HP)\n', ...
        P_min, P_min_kW, P_min_HP);

% Gearbox and chain efficiency
G_eff = 0.9; % assume gearbox efficiency
C_eff = 0.95; % assume chain and sprocket efficiency
Eff = G_eff * C_eff;

SF = 1; % Assume Service Factor

P_motor = P_min / Eff * SF;
```

```
fprintf('P_motor: %.2f W\n', P_motor);
```

Appendix 4. MATLAB for shaft dimensioning

```
clear all, close all, clc

Lw = 0.4325;
Lp = 2.425;
M = 50108 * Lw + (1733 * Lp/2) * Lw/(Lp/2); % [Nm] Bending moment
%M = 50000 * 2*0.1025; % [Nm] Bending moment
T = 129.9; % [Nm] Torque
disp(['M = ' num2str(M,'%.2f') ' Nm'])

%% Solve for diameter
% ny = 2; %recommended safety factor
% Sy = 1862*10^6; % [MPa] Yield strength
%
% d_min_T = ( 16/pi * sqrt(M^2 + T^2) / (0.5*Sy/ny) )^(1/3);
% d_min_vM = ( 32/pi * sqrt(M^2 + 3*T^2) / (Sy/ny) )^(1/3);
%
% disp(' ')
% disp(['Min d (Tresca) = ' num2str(d_min_T*1000,'%.2f') ' mm'])
% disp(['Min d (von Mises) = ' num2str(d_min_vM*1000,'%.2f') ' mm'])

%% Solve for Yield Strength
% d = 0.05;     % m (50 mm)
% ny = 2;
%
% Sy_req_T = 32*ny/pi/d^3 * sqrt(M^2 + T^2);
% Sy_req_vM = 32*ny/pi/d^3 * sqrt(M^2 + 3*T^2);
%
% disp(' ')
% disp(['Required S_y (Tresca) = ' num2str(Sy_req_T/1e6,'%.2f') ' MPa'])
% disp(['Required S_y (von Mises) = ' num2str(Sy_req_vM/1e6,'%.2f') ' MPa'])

%% Solve for Safety factor
% THIS IS THE CASE WE ARE GOING WITH
d = 0.06;     % m (50 mm)
Sy = 1862*10^6; % [MPa] AISI Alloy 4340 Heat treated condition V

ny_T = (pi*(Sy)*d^3) / (32*sqrt(M^2 + T^2));
ny_vM = (pi*(Sy)*d^3) / (32*sqrt(M^2 + 3*T^2));

disp(' ')
disp(['Safety factor (Tresca) = ' num2str(ny_T,'%.2f')])
disp(['Safety factor (von Mises) = ' num2str(ny_vM,'%.2f')])
% Ideal scenario Cargo loaded with center of Mass in middle:

%M_ideal = M *0.5^2/0.55^2;
%disp(' ')
%disp(['Ideal Bending Moment = ' num2str(M_ideal,'%.2f') ' Nm'])
```

Appendix 5. Convergence study for FEM

The convergence **for the maximum deformation (in z-axis) in the analysis of the beam is shown in Figure 1, and in the analysis of the platform in Figure 3. The convergence for the maximum von Mises equivalent stress in the analysis of the beam is shown in Figure 2, and in the analysis of the platform in Figure 4**

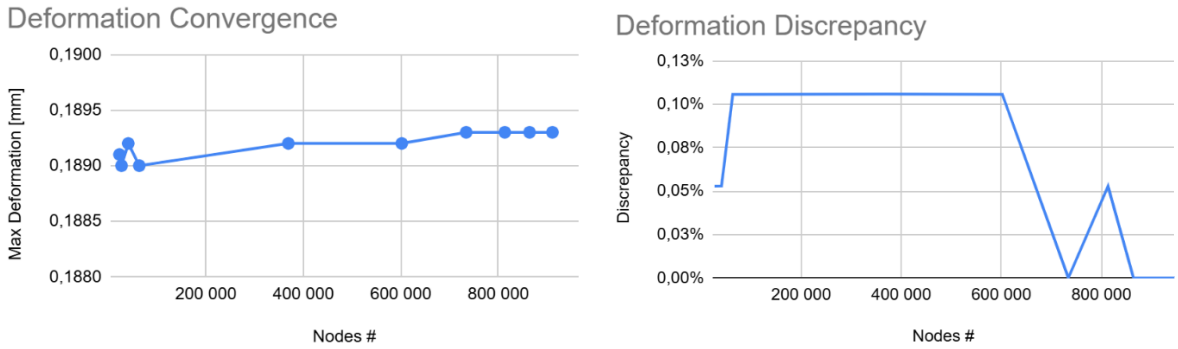

Figure 1 – Convergence of maximum deformation in analysis of beam

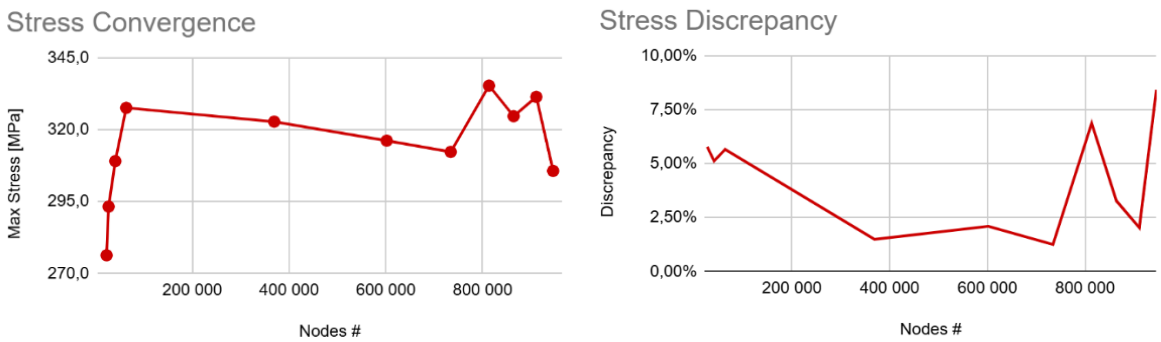

Figure 2 – Convergence of maximum von Mises equivalent stress in analysis of beam

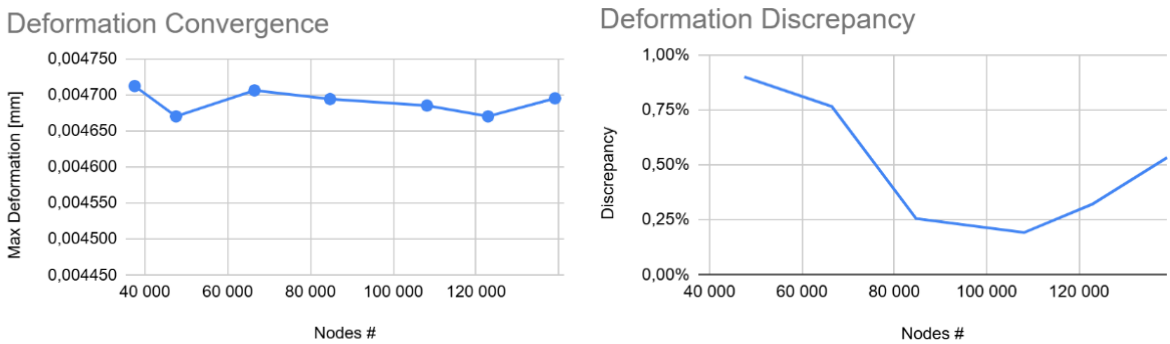

Figure 3 – Convergence of maximum deformation in analysis of platform

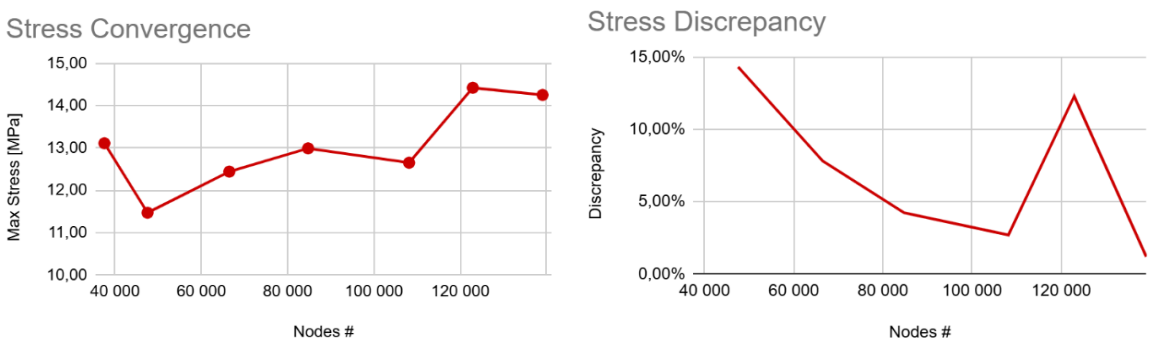

Figure 4 – Convergence of maximum von Mises equivalent stress in analysis of platform